Ball Lightning Fusion Reactors

TABLE OF CONTENTS

Title Page

INTRODUCTION 1

BRIEF SUMMARIES 1

Electron Power Systems, Inc., ... 3

Ball Lightning Events Explained as Self-Stable High-Density Plasma Toroids or Atmospheric Spheromaks 8

High-Density Ions May Make Clean Fusion Energy a Reality 22

New Space Propulsion Technology to Lift Payloads into Orbit with 99% Cost Savings per Kilogram 25

Ball Lightning and Self-Confined Thermonuclear Reactions 28

Hydrogen Charging Vessel 37

Hawkings' Generator of Cold Electricity 37

Please respect the intellectual property rights of the current copyright/patent holders pertaining to these inventions by obtaining their written permission before using or selling their inventions.

Gary Vesperman
Advisor to Sky Train Corporation
www.skytraincorp.com
533 Tara Court
Boulder City, NV 89005-1152
702-435-7947
garyvesperman@yahoo.com
www.padrak.com/vesperman
www.commutefaster.com/vesperman.html

INTRODUCTION

A small portfolio of ball lightning fusion reactor-related innovations has been accumulated after two decades of research and collaboration with numerous inventors. Some of these inventions are so radical that they could require tens of millions of dollars each to fully exploit. It seems likely that some of these inventions of new energy sources and space propulsion technologies actually work as claimed and are suitably practical for worldwide deployment. An ideal energy source satisfies all these requirements:

- Is practical, economical, and scalable from 1 kilowatt through 1000 megawatts.
- No rare elements for construction or fuel are needed.
- Operates standalone or needs minimal fuel or auxiliary energy input.
- Does not pollute.
- Can be stored and operated reliably and safely without burdensome maintenance in Death Valley during summer and the South Pole during winter.
- Is quiet.
- Inventor(s) is (are) reasonable to do business with.

Other energy researchers can provide similarly extensive compilations of new energy technologies. Tom Valone's Integrity Research Institute (see http://users.erols.com/iri/), http://www.newenergytimes.com/, Sterling Allan's http://FreeEnergyNews.com/, http://www.infinite-energy.com/, Jerry Decker's http://escribe.com/science/keelynet/, Bruce Meland's http://www.electrifyingtimes.com/, and Russia's http://www.faraday.ru have all accumulated large databases of reports and comments on energy. Robert A. Nelson, P.O. Box 19250, Jean, Nevada 89019 amassed 10,000 pages on energy inventions and other scientific and technological subjects in his www.rexresearch.com – the contents of which are available on a $13 CD.

Development and commercial manufacturing of a proven new energy source requires competent people, a doable business plan, integrity, and sufficient money to carry the enterprise until it reaches profitability. Each energy invention may be burdened with the baggage of its own unique little tale. Some energy inventors may be brilliant, of course, but are otherwise incompetent businesspeople. Development may be hampered by unethical investors or associates, an inventor's illness or death, or suppression by existing energy industries and the tangle-footed US federal government. Shortcomings in the energy invention itself may need further research to be mitigated or eliminated, if possible.

New energy sources typically do not qualify for financial support from venture capital, large corporations restricted to operating within their chosen missions, charitable foundations, and governments unaware of or even hostile to unconventional energy sources.

BRIEF SUMMARIES

Electron Power Systems, Inc. – Electron Power Systems, Inc. has discovered the explanation for ball lightning and from that has invented and protected it with patents. The ball lightning solution is a self-stable plasma ring (toroid) that needs no magnetic fields for containment. Pairs of balls of these plasma toroids can be created and collided with each other. This is a potential improvement to the colliding plasmoid processes developed over the years by others. The result will be clean energy from one plasma ring of boron colliding with one of protons. Safe, clean, low cost colliding plasma toroid fusion generators could range from 10 kilowatts through 1000 megawatts. All transportation vehicles could be reliably and safely powered with plasma toroid fusion reactors with substantially lower manufacturing, operating and maintenance costs and without poisonous emissions. EPS expects to reduce the mass and cost of aircraft by 70% and space launch costs by more than 95%.

Ball Lightning Events Explained as Self-Stable High-Density Plasma Toroids or Atmospheric Spheromaks – Spinning plasma toroids are created using high power electric arcs similar to lightning bolts. The spinning toroids are observed to be stable in atmosphere with no confining magnetic fields. Spinning toroids have the appearance of spheres, or balls, and create bright light through collisions with neutrals in the atmosphere. The spinning toroids are observed to last for more than 200 milliseconds in partial atmosphere. An explanation for the plasma toroid is presented.

High-Density Ions May Make Clean Fusion Energy a Reality – Electron Power Systems, Inc. (EPS) claims to have discovered the explanation for ball lightning and protected that explanation with several patents. EPS is working toward making clean fusion energy a reality by creating high ion density plasma toroids and colliding them to create clean fusion. Safe, pollution-free fusion generators could reliably generate electricity with capacities ranging from 10 kilowatts through 1000 megawatts at the cost of 10% of today's electricity. All transportation vehicles could be reliably and safely powered with fusion generators with substantially lower production, operating and maintenance costs and without poisonous emissions. EPS expects to reduce the mass and cost of aircraft by 70% and space launch costs by more than 95%.

New Space Propulsion Technology to Lift Payloads into Orbit with 99% Cost Savings per Kilogram – Rockets would have 8,000,000 pounds of hydrocarbon fuel replaced by one pound of fuel. The basis for this new propulsion technology is a stable plasma spiral toroid similar to ball lightning that remains stable in partial atmosphere with no magnetic fields for containment.

Ball Lightning and Self-Confined Thermonuclear Reactions – Ball lightning characteristics, theories and experiments are discussed. The long lifetime of ball lightning in an otherwise explosive situation suggests that perhaps the confinement mechanism represents processes that could be exploited to confine sustained thermonuclear reactions. A mathematical model of ball lightning treating it as a quasi-superconducting sphere is presented.

A simple ball lightning fusion reactor is designed that has hundreds of kilo-amperes discharged through two electrodes. The electric field between the electrodes will polarize the discharge plasma into an upper half with negative space charge and a lower half with positive space charge. Magnetic fields turn the plasma sphere into a hydro-magnetic capacitor. A gas jet is initiated which blows the discharge plasma from between the electrodes to the more spacious reaction chamber. Another gas jet then supports and stabilizes the plasma sphere in the reaction chamber. Once the plasma ball is in the reaction chamber thermonuclear fuel is added to the ambient atmosphere. The fuel enters the plasma ball through diffusion and the meridianal circulation carries it to the hot thermonuclear center where release of nuclear energy sustains the reaction.

Gary Vesperman suggests substituting cold electricity for the massive current between the electrodes to possibly greatly increase the thermonuclear reaction's energy efficiency.

Superpositive charging of hydrogen will align it to crystalline structure for a few seconds. During this period, any electrical spark will fuse the atoms of hydrogen with great speed. Gary Vesperman suggests experimenting with Mike Hanson's crystallized hydrogen or deuterium as fuel for self-confined thermonuclear reactions.

Hydrogen Charging Vessel – Superpositive charging of hydrogen will align it to crystalline structure for a few seconds. During this period, any electrical spark will fuse the atoms of hydrogen with great speed. One possible application of crystallized hydrogen or deuterium is as fuel for self-confined thermonuclear reactions.

Hawkings' Generator of Cold Electricity – The Hawkings' generator produces a 6 to 8-inch white spark of cold electricity (no electrons) 4 inches in diameter with very little power. Cold electricity can still power lamps, etc. Materials inserted in a spark of cold electricity sometimes transmute to elements of higher density.

Electron Power Systems, Inc.,

Electron Power Systems, Inc. (EPS) has discovered the explanation for ball lightning and from that has invented and patented the explanation which is a self-stable plasma toroid that needs no external magnetic field for confinement. Pairs of stable plasma toroids will be created and collided with each other. The result is planned to be clean fusion of protons and boron which produces useable clean heat energy.

EPS's new discovery in physics offers the potential to locally produce low-cost, clean energy for homes and buildings – independent of power plants. EPS owns the new technology and plans to initially produce a safe, clean, compact 10-kilowatt electricity generator that would not need any nuclear fuels nor fossil fuels and will produce no green house gases.

A home owner would need a one-liter sized container of environmentally benign hydrogen/boron fuel per year at a 20:1 fuel cost savings compared to commercially produced electricity or fossil fuels.

EPS's new discovery would allow anyone worldwide to buy a small home generator – about the size but less than the cost of a Sears 10-kilowatt portable generator. It would power their home plus several nearby homes even where there are no power grids or power plants. This will be a step towards providing low-cost, local electricity to help eliminate poverty worldwide.

EPS plans to build 10-kilowatt generators by applying its newly discovered technology to improve work done by others to create energy. The basic work was shown successfully in the 1980s at the University of Miami. But that technology had limitations at that time. EPS's new technology will overcome those limitations.

From a modest start with producing 10-kilowatt ball lightning fusion reactor powered generators, EPS expects to branch out to other applications of its technology as well as producing larger and larger generators. From a modest start producing clean, reliable, safe 10-kilowatt ball lightning fusion reactor powered generators, EPS plans to methodically produce larger and larger generators and also to branch out to other applications of its technology. EPS even has a preliminary design with supporting calculations for massive 1000-megawatt base load generators.

Safe, clean, much cheaper pollution-free ball lightning fusion reactor-powered generators could reliably generate electricity with capacities ranging from 10 kilowatts through 1000 megawatts at the cost of 10% of today's electricity. All transportation vehicles could be reliably and safely powered with ball lightning fusion reactors with substantially lower production, operating and maintenance costs and without poisonous emissions. EPS expects to reduce the mass and cost of aircraft by 70% and space launch costs by more than 95%.

Humankind's practically insatiable demand for energy implies a simply humongous market potential for EPS which would encompass all of the world's producers of oil, coal, uranium and electricity plus all manufacturers of transportation vehicles including cars, trucks, buses, farm equipment, ships, boats, construction equipment, mining equipment, trains, satellites, aircraft, snowmobiles, and military vehicles.

Countries which export oil will benefit from not having to quickly burn up their finite oil reserves on gasoline and diesel fuel. Instead they will be able to draw down their reserves more slowly by making products of higher value such as plastics, medicines, fertilizers and synthetic textiles.

Several thousand neutron tubes are in use in the USA today that safely collide hydrogen ions to produce neutrons, which in turn are used for medical testing, industrial process control, and homeland security. An ion source produces hydrogen ions (deuterium), which are accelerated to 110 kilovolts, then directed to hit a hydrogen target (also deuterium), which produces neutrons, and also heat as a waste product.

Neutron tubes today produce neutrons and a low level of heat energy. The low density of the hydrogen ions limits the amount of energy produced.

In the 1970's, Dr. Wells at the University of Miami collided two plasma toroids to produce low-level fusion energy in the TRISOPS system. The amount of energy produced was limited by the short duration time of the plasma toroids used, as well as their low density and their low level of energy.

Electron Power Systems, Inc., (www.electronpowersystems.com) has discovered a plasma electron spiral toroid that remains stable without magnetic confinement – by using background gas pressure for confinement instead. These new plasma toroids are observed to remain stable for thousands of times longer than classical plasma toroids, which opens the way for new clean energy applications. These toroids are similar to nature's balls of lighning which are equally stable for up to many seconds and have no need for magnetic confinement such as the case with massive power hungry hot fusion machines.

EPS's new stable plasma electron spiral toroids overcome each of the neutron tubes limitations, and will potentially result in fusion with no magnetic containment required – thus producing a practical ball lightning fusion reactor. EPS's challenge is to adapt the new stable plasma toroid to the TRISOPS method.

The ball lightning fusion reactor adapts the electron spiral toroid Spheromak to the neutron tube design. The electron spiral toroid Spheromak is patented jointly with MIT scientists who also have published papers confirming the electron spiral toroid Spheromak physics and data. The electron spiral toroid Spheromak will overcome the neutron tube limitations by increasing ion density by 2500 times. A metal containment can be used for efficient heat energy collection and conversion.

The electron spiral toroid Spheromak-based ball lighning fusion reactor will be less than three feet in length, the same as for present neutron tubes, and small enough to fit in an electric car. Elimination of the need for magnetic containment allows this power supply to be small and compact.

A ball lightning fusion reactor will use hydrogen/boron to produce clean energy without neutrons. The energy in one pound of hydrogen/boron fuel equals the energy of 250,000 pounds of gasoline. Hydrogen and boron are plentiful and will not run out, as oil is projected to do in the 21st century.

The electron spiral toroid Spheromak is a plasma toroid that is self-organized and self-stable with no magnetic fields needed to contain it. Inventor Clint Seward has not seen any published descriptions of any devices nor phenomena similar to the electron spiral toroid Spheromak. The US Patent Office agrees and has issued five patents to date.

The ball lighning fusion reactor was recently selected by the New Energy Congress as one of the few technologies now known to have a genuine potential to replace fossil fuels. See the lengthy analysis of the ball lightning reactor in http://pesn.com/2006/03/08/9600242_Spheromak_Plasma_Toroid/

Gary Vesperman has compiled numerous nonmainstream energy technologies in his websites www.padrak.com/vesperman, www.commutefaster.com/vesperman.html, and http://the-door.net/the-colorado-center/radioactivity-neutralization-methods-and-more/. They include the ball lightning fusion reactor (also called 'electron spiral toroid Spheromak micro-fusion reactor') with the hydrino generator, focus fusion, thorium power pack, IPMS thorium-232 electricity generator, Clem over-unity vegetable oil engine, thin-film electrolytic cells, magnetic drive generator, noble gas plasma engine, Searl effect generator, Magnatron – light-activated cold fusion magnetic motor, hydro-magnetic dynamo, IPMS energy storage/battery device, electrino fusion power reactor, environmental heat engines, and several others. Some of these other energy inventions appear to have at least one limitation that is not shared with the ball lightning fusion reactor.

Why this is important is that all spheromaks reported to date dissipate in microseconds, while the electron spiral toroid Spheromak has been observed to endure with no confining magnetic field for hundreds of milliseconds, and theoretically will remain stable for many seconds.

Each year 15 million cars and trucks are sold in the USA, and 48 million are sold worldwide. EPS expects to eventually replace all of them with silent, reliable, safe, emissions-free ball lightning fusion electric vehicles with substantially lower manufacturing, operating, and maintenance costs.

In addition, EPS has designed a 10 kilowatts ball lightning fusion generator that will operate on clean, non-polluting fuel, and can operate locally. This innovation will potentially improve the lives of most of humanity by making available low-cost electricity that anyone can produce in their own homes. It will help literally billions of people. The paper design shows that the ball lightning fusion generator will be the approximate size and cost of a 10 kW generator available today in any hardware store, with the advantage that it will not use fossil fuels, but will use clean energy instead.

Hoover Dam's 17 turbines have a total nameplate capacity of 2080 megawatts. An article in the Institute of Electrical and Electronic Engineers, Inc., Spectrum magazine over ten years ago stated that world demand for electricity increases approximately 500 megawatts every day. To put this in perspective, the equivalent of another Hoover Dam would have to be built every four days to keep up with world electricity increase demands. The EPS's ball lightning fusion reactor will make local generation possible without the need for more power plants or more power lines.

Major contributors to air and water pollution are the fossil-fueled engines of aircraft, farm harvesters and tractors, ships, boats, snowmobiles, trains, military vehicles, and all-terrain vehicles. Their engines could be replaced with cheaper electric motors and batteries charged by safe, non-polluting compact onboard ball lightning fusion generators.

Electron Power Systems, Inc. is an early stage company working to develop the ball lightning fusion reactor. From EPS will come new applications, including a practical ball lightning fusion electricity generator, a low-cost space launch vehicle, a high-kinetic energy anti-missile beam, and practical zero-emission cars, trucks, buses, farm equipment, construction equipment, military vehicles, and jet aircraft.

EPS is moving to commercialize these concepts. EPS has assembled a team of engineers, and plasma physicists – all as contractors. EPS is working on proof of concept demonstrations for the applications.

EPS plans to build a laboratory demonstration unit in two to three years with present funding levels, and then the first commercial prototype. Recent breakthroughs in the EPS lab give confidence this will happen within this timeframe. More funding will make this happen sooner.

EPS is seeking $2 million as a first round of investment to complete the development of a demonstration unit in eighteen months. A second investment of $8 million will be needed to complete a prototype unit in eighteen months after the demonstration unit.

Up until now EPS has had no sales and operates with funding from angel investors, each of whom is retired and has accumulated a substantial personal fortune, allowing these types of investments of high risk, high reward. EPS also operates with funding from the founder.

EPS operates on a low budget, spends only what it has, and has incurred no debt or obligations. In this manner it is able to operate indefinitely, while continuing to make progress each year. Additional small amounts of funding will speed developments.

Some years ago a Forbes article stated that PECO (formerly Philadelphia Electric Company), with an income stream to back it up, was able to sell on Wall Street $4 billion worth of bonds paying 5.8 per cent. A ball lightning fusion generator manufacturer could simply sell bonds to build and operate generators at a low interest rate. Generator loan payback times may be in the ball park of a half-year to a year, depending on the local electricity market price.

As soon as a ball lightning fusion generator is paid for, the revenue from that time on would be almost pure profit. Once a track record is established by successfully installing a few ball lightning fusion generators, Electron Power Systems, Inc., could raise money to build and install more generators by simply selling billions of dollars of bonds instead of stock. So therefore, there wouldn't be any dilution of ownership.

EPS plans to partner with major electricity producers and suppliers. EPS will license them to produce electricity as they do now. EPS plans to partner with automobile manufacturers to license the technology. EPS plans to partner with defense and aerospace contractors to license the technology.

The electron spiral toroid Spheromak ball lightning reactor has five patents and is documented in published papers confirming the physics and data. See the first four references below (1), (2), (3), (4).

Clint Seward discovered the electron spiral toroid Spheromak, see Reference (5), while studying ball lightning. Seward has developed a secret formula to produce the electron spiral toroid Spheromak that is not reported in any other reference to date that he has seen.

References

1. Seward, C., Chen, C., Ware, K., Ball Lightning Explained as a Stable Plasma Toroid. PPPS- 2001 Pulsed Power Plasma Science Conference, June 2001.
2. D. C. Seward, C. Chen, R. Temkin, Energy Storage Device, US Patent 6,140,752, Oct. 31, 2000.
3. C. Chen, R. Pakter, and D.C. Seward, Equilibrium and Stability Properties of Self-Organized Electron Spiral Toroids, Physics of Plasmas. Vol. 8, No. 10. Oct. 2001.
4. W. J. Guss, Chen, C., Equilibrium of Self-Organized Electron Spiral Toroids. Physics of Plasmas. August 2002.
5. Seward, C., Ball Lightning Explanation, Leading to Clean Energy. Acton, MA 01720. Seward Publishing Co., 2011.

MANAGEMENT

Clint Seward is the discoverer of the electron spiral toroid Spheromak and received the initial patents. He has been working ever since to scale up the results, which he has been able to do recently. He has been a project design engineer and program manager for many years, working initially with the US Air Force B-58 Hustler program, and as a project manager and engineering manager in several major corporations. His work was defense initially, moving to security and process control, then energy related.

Clint was an Engineering Manager for Mosler, an American Standard Division 1970 thru 1978, and an Engineering Manager and VP of Marketing for Bristol-Babcock 1978-1985 – an ACCO fortune 500 Company. He was General Manager of Iontrack, a Division of a large international company 1985-1989 (now a Division of GE). He has been President of his own company Electron Power Systems, Inc. from 1989 to present. Education: MSEE; University of Michigan 1965; BS at US Military Academy at West Point 1963.

D C Seward is the VP Engineering of Electron Power Systems, Inc. He has worked on the ball lightning fusion reactor technology since its inception in 1986. He has the responsibility for organizing the experiments and bringing qualified people in to help with the work.

DC has worked as the VP Engineering of EPS on a contract basis from 1998 to the present as funding allows. He is employed full time as a Field Sales engineer for Ember Systems, a wireless technology company, 2005 to the present. Previously he was a Product Design Engineer, Trimble Navigation: 1994-1998

Education: MSEE Massachusetts Institute of Technology, 1994.

Jim Becker is acting CEO and Marketing VP. Jim has experience as a senior executive in the high tech sector with extensive experience managing rapid growth organizations. He has a broad technology background with proven skills in computer systems, avionics industries, and health care information technology along with direct functional experience in finance, sales, marketing, engineering and corporate management in both domestic and international settings.

Education: Thayer School of Engineering, Dartmouth College; Master of Engineering 1976; Master of Business Administration 1975; Bachelor of Engineering 1970.

PAPERS AND PATENTS for Clint Seward

Chen, C., Pakter, R., Seward, D. C. "Equilibrium and Stability Properties of Self-Organized Electron Spiral Toroids." Physics of Plasmas. Vol. 8, No. 10. October 2001.

Seward, C., Chen, C., Ware, K. "Ball Lightning Explained as a Stable Plasma Toroid." PPPS-2001 Pulsed Power Plasma Science Conference. June 2001.

Seward, C. "Propulsion Using a Stable Plasma Thruster." STAIF 2001, (Space Technology and Applications International Forum-2001). American Institute of Physics , www.aip.org/catalog/conforder.html. February 15, 2001.

Seward, C.; Chen, C., Temkin, R. Energy Storage Device, US Patent 6,140,752, October 31, 2000.

Seward, D. C. Electron Spiral Toroid; US Patent 5,773,919; June 30, 1998.

Seward, D. C. Energy Storage System, US Patent No. 5,589,727. December 31, 1996.

Seward, D. C., Chen, C., Temkin, R. (1996b). International Patent Application WO 96/38848, Energy Storage Device, Published December 5, 1996.

Seward, D. C. Fixed Geometry Plasma and Generator, US Patent 5,175,466. Dec. 29, 1992.

The Products page of www.electronpowersystems.com sells a book "Ball Lightning: Leading to Clean Energy" and a paper "Spheromaks Observed Forming in Atmosphere". The paper's abstract:

Plasma toroids, called spheromaks, are reported here as observed forming in partial atmosphere from high power electric arc events similar in power to lightning ground strokes. The spheromaks are observed to be stable in partial atmosphere with no confining magnetic fields and are observed to last for more than 200 milliseconds in partial atmosphere. This paper describes the observations and presents a model that explains the

properties of these spheromaks, which we call Electron Spiral Toroid Spheromaks (ESTS's) due to the spiraling motion of the charged particles. It includes four TV images.

The model presented is a hollow toroid with a thin outer shell of electrons that all travel in parallel paths orthogonal to the toroid circumference, in effect spiraling around the toroid. A comparable inner surface of ions acts to neutralize the space charge. The paper provides formulas describing the ESTS. Potential ESTS applications include X-ray production, air defense, and energy production.

The cost to produce a 10-kilowatt EST Spheromak electricity generator would be about $1100 in production quantities. The EST Spheromak generator would have fewer parts than a comparable Sears generator.

Electron Power Systems, Inc., does not have a working prototype. The company has identified the instrumentation and needs another $100,000 for laboratory work. With $2,000,000, the company expects to have in two years a demonstrable prototype. In an additional year for $8,000,000 a production prototype is expected to be built. Remember, each piece of the project uses technology others have demonstrated.

Inventor: Clint Seward, Acton, Massachusetts, USA www.electronpowersystems.com
US Patents 5,175,466, 5,589,727, 5,773,919, and 6,140,752

Ball Lightning Events Explained as Self-Stable High-Density Plasma Toroids or Atmospheric Spheromaks

Spinning plasma toroids are created using high-power electric arcs similar to lightning bolts. The spinning toroids are observed to be stable in atmosphere with no confining magnetic fields. Spinning toroids have the appearance of spheres, or balls, and create bright light through collisions with neutrals in the atmosphere. The spinning toroids are observed to last for more than 200 milliseconds in partial atmosphere.

An explanation for the plasma toroid is presented that it is a hollow toroid of electrons where all the electrons travel in parallel paths orthogonal to the toroid circumference and reside in a thin outer shell of the toroid. The electron motion creates a current in the surface that in turn creates an internal magnetic field. Equations are presented detailing the initiation of the plasma toroid, and detailing the plasma toroid itself.

The stability analysis for the plasma toroid has been completed that explains how the plasma toroid remains stable in atmosphere. The spinning plasma toroid has the appearance of ball lightning, in observations, computer simulations, and equations. The plasma toroid explains how a plasma ring can be stable in atmosphere with no external magnetic fields, and how it can contain many electrons with high energy. Ball lightning is often reported as a ring current, in toroid shape, and since a spinning ring appears as a sphere or ball, the spinning plasma toroid provides an explanation for ball lightning. The technology of the plasma toroid has the potential for new applications in propulsion and energy generation and storage.

The source of the following paper is http://ieeexplore.ieee.org/xpls/icp.jsp?arnumber=6748850.

Abstract
Spinning plasma toroids, or spinning spheromaks, are reported as forming in partial atmosphere during high-power electric arc experiments. They are a new class of spheromaks because they are observed to be stable in partial atmosphere with no confining external toroidal magnetic fields, and are observed to endure for more than 600 ms. Included in this paper is a model that explains these stable plasma toroids (spheromaks); they are hollow plasma toroids with a thin outer shell of electrons and ions that all travel in parallel paths orthogonal to the toroid circumference – in effect, spiraling around the toroid. These toroids include sufficient ions to

neutralize the space charge of the electrons. This model leads to the name 'Electron Spiral Toroid Spheromak' (ESTS). The discovery of this new class of spheromaks resulted from work to explain ball lightning. A comparison is made between the experimental observations of spheromaks in partial atmosphere and reported ball lightning observations; strong similarities are reported. The ESTS is also found to have a high ion density of ~ 10^{19} ions/cm^3 without needing any external toroidal magnetic field for containment, compared, for example, to tokamaks, with ion density limits of ~ 10^{15} ions/cm^3. This high ion density is a defining characteristic and opens the potential to be useful in applications. The ESTS is a field reversed configuration plasma toroid.

SECTION I
INTRODUCTION

Spheromaks are self-organized plasmas in a toroidal shape, in which an internal magnetic field is produced by the internal current flow in the plasma[1]. Spheromaks have been studied since the 1950's[2,3,4] because of their potential in the field of nuclear fusion as a plasma confinement device or a reactor fueling device[5,6]. There is also potential as an intense X-ray generating device because the spheromak can be magnetically compressed and accelerated[7,8].

Many laboratories are currently conducting spheromak experiments with spheromaks formed in high vacuum and at high energy. For example, this work is reported by the Princeton Plasma Physics Laboratory, Los Alamos National Laboratory, the University of Washington, the University of New Hampshire, and the Swarthmore Magnetofluids Laboratory, to name just a few.[9,10,11,12,13] The work at these labs is reported as conducted in large spheromak containment chambers that are necessary to create high-vacuum environments and to provide external magnetic containment.

---

[1] P. M. Bellan, "Spheromaks: A Practical Application of Magnetohydrodymanic Dynamos and Plasma Self-Organization", pp. 1-14, 2000, Imperial College Press.

[2] S. Lundquist, "Magneto-hydrostatic fields", Ark. Fys., vol. 2, pp. 361-365, 1950.

[3] H. P. Furth, M. A. Levine and R. W. Waniek, "Production and use of high transient magnetic fields. II", Rev. Sci.Instrum., vol. 28, no. 11, pp. 949-959, 1957, Quick Abstract:
The transient containment of high magnetic energy densities in coils of various geometries is discussed. Inherent mechanical and thermal limitations are shown to apply to coils relying solely on the strength of materials. The usefulness of inertial effects is demonstrated. Instrumentation is described for producing 10 μsec range pulses of amplitude up to 1.6 megagauss in single-turn coils. Experimental observations document the appearance of 'saw effect' and Kruskal-Schwarzschild instabilities at very high fields. The limitations characteristic of conventional coils can be overcome in force-free geometries. The appropriate mathematics is developed and illustrated with practical examples.

[4] J. B. Taylor, "Relaxation of toroidal plasma and generation of reverse magnetic fields", Phys. Rev. Lett., vol. 33, no. 19, pp. 1139-1141, 1974

[5] W. H. Bostick, "Plasmoids", Sci. Amer., vol. 197, pp. 87-87, 1957

[6] H. Alfven, L. Lindberg and P. Mitlid, "Experiments with plasmarings", Nucl. Energy, vol. 1, no. 3, pp. 116-174, 1959

[7] J. H. Hammer, C. W. Hartman, J. L. Eddleman and H.S. McLean, "Experimental demonstration ofacceleration and focusing of magnetically confined plasma rings", Phys. Rev.Lett., vol. 61, no. 25, pp. 2843-2846, 1988

[8] J. H. Degnan, "Compact toroid formation, compression, and acceleration", Phys. Fluids, vol. 5, no. 8, pp. 2938-2958, 1993

[9] C. E. Myers, E. V. Belova, M. R. Brown, T. Gray, C. D. Cothran and M. J. Schaffer, "Three-dimensional MHD simulations of counter-helicity spheromak merging in the Swarthmore Spheromak experiment", Phys. Plasmas, vol. 18, no. 11, pp. 112512-112530, 2011

[10] T. Gray, M. R. Brown, C. D. Cothran, G. Marklin and M. J. Schaffer, "Three-dimensional reconnection and relaxation of merging spheromak plasmas", Phys. Plasmas, vol. 17, no. 10, pp. 102106-102114, 2010

[11] H. Ji and W. Daughton, "Phase diagram for magnetic reconnection in heliophysical, astrophysical, and laboratory plasmas", Phys. Plasmas, vol. 18, no. 11, pp. 111207-111217, 2011

[12] B. S. Victor, "Evidence for separatrix formation and sustainment with steady inductive helicity injection", Phys. Rev. Lett., vol. 107, no. 16, pp. 165005-165005, 2011

[13] S. D. Baalrud, A. Bhattacharjee, Y.-M. Huang and K. Germaschewski, "Hall magnetohydrodynamic reconnection in the plasmoid unstable regime", Phys. Plasmas, vol. 18, no. 9, pp. 092108-092116, 2011

This paper presents observations of spheromaks that are produced in partial atmosphere in a laboratory, using electric arcs that are similar to lightning events.[14,15,16]

The spheromaks reported here are stable without any external toroidal magnetic field for containment. They are formed in partial atmosphere in a bell jar, rather than in the high vacuum in large containment chambers, as reported in most spheromak research[17]. This is a new class of spheromaks, called 'Electron Spiral Toroid Spheromaks' (ESTSs), and was first reported in 2001 by Chen[18]. An excerpt from that paper notes, "It is found that a class of self-organized [ESTS] equilibria exists with or without an externally applied toroidal magnetic field. It is shown that in the absence of any applied toroidal magnetic field, the [ESTS] equilibria are stable at high electron densities, i.e., at high toroidal self-magnetic fields, although they are unstable at low electron densities, i.e., at low toroidal self-magnetic fields." Chen's paper was written to analyze and explain the stable plasma toroid experimental results from the laboratory of Electron Power Systems, Inc., (EPS).

SECTION II
OBSERVATIONS

Electron Spiral Toroid Spheromaks (ESTSs) have been created at Electron Power Systems, Inc. for a number of years by using high-power electric arcs with similar current densities and pulse widths to lightning events[19]. The ESTSs are observed to be stable in partial atmosphere with no confining external toroidal magnetic fields. ESTSs formed by arcs are often observed to be spinning, and so have the appearance of spheres that create light through collisions with neutrals in atmosphere. A method for generating ESTSs has been patented[20]. In the latest experiments, the ESTS is formed around the electric arc, as shown in Fig. 1 – a new observation (patent pending). Ongoing experimental work to increase the ESTS density produced the fully formed ESTS in Fig. 2.

---

[14] S. Singer, The Nature of Ball Lightning, pp. 1-14, 1971, Plenum

[15] J. D. Barry, Ball Lightning and Bead Lightning, pp. 1-298, 1980, Plenum

[16] M. A. Uman, The Lightning Discharge, pp. 23-25, 1987, Academic

[17] C. Seward, Ball Lightning Explanation, pp. 1-90, 2011, Amazon.com

[18] C. Chen, R. Pakter and C. Seward, "Equilibrium and stability properties of self-organized electron spiral toroids", Phys. Plasmas, vol. 8, no. 10, pp. 4441-4450, 2001

[19] C. Seward, C. Chen and K. Ware, "Ball lightning explained as a stable plasma toroid", Proc. IEEE Conf. Rec. PPPS, pp. 269-273, 2001 Quick Abstract: Summary form only given, as follows. Describes spinning plasma toroids that are created using high power electric arcs similar to lightning bolts. The spinning toroids are observed to be stable in atmosphere with no confining magnetic fields. Spinning toroids have the appearance of spheres, or balls, and create bright light through collisions with neutrals in the atmosphere. The spinning toroids are observed to last for more than 200 milliseconds in partial atmosphere. The paper describes the initiation apparatus and parameters. An explanation for the plasma toroid is presented that it is a hollow toroid of electrons where all the electrons travel in parallel paths orthogonal to the toroid circumference and reside in a thin outer shell of the toroid. The electron motion creates a current in the surface that in turn creates an internal magnetic field. Equations are presented detailing the initiation of the plasma toroid, and detailing the plasma toroid itself. The stability condition for the plasma toroid has been identified that explains how the plasma toroid remains stable in atmosphere. The observations of the plasma toroids match computer simulations of spinning toroids with constant luminosity. The spinning plasma toroid has the appearance of ball lightning in observations and in computer simulations. The plasma toroid explains how a plasma ring can be stable in atmosphere with no external magnetic fields, and how it can contain many electrons with high energy. Ball lightning is often reported as a ring current, in toroid shape, and since a spinning ring appears as a sphere or ball, the spinning plasma toroid provides an explanation for ball lightning. The technology of the stable plasma toroid has potential for new applications in propulsion, energy generation, and energy storage.

[20] C. Seward, C. Chen and R. Temkin, "Energy storage device", 6,140,752, 2000

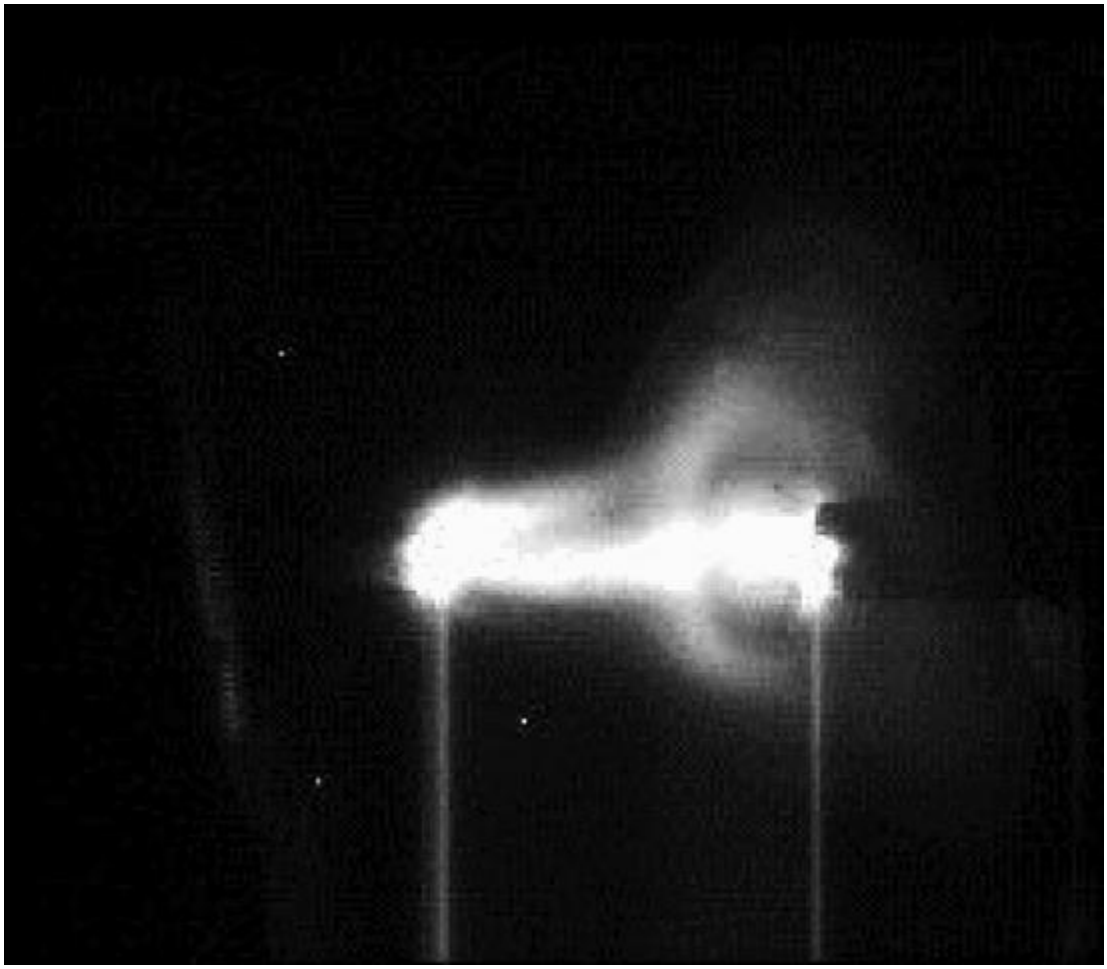

Fig. 1. Plasma toroid, or spheromak, formed around an electric arc in 1/8 atmosphere of nitrogen.

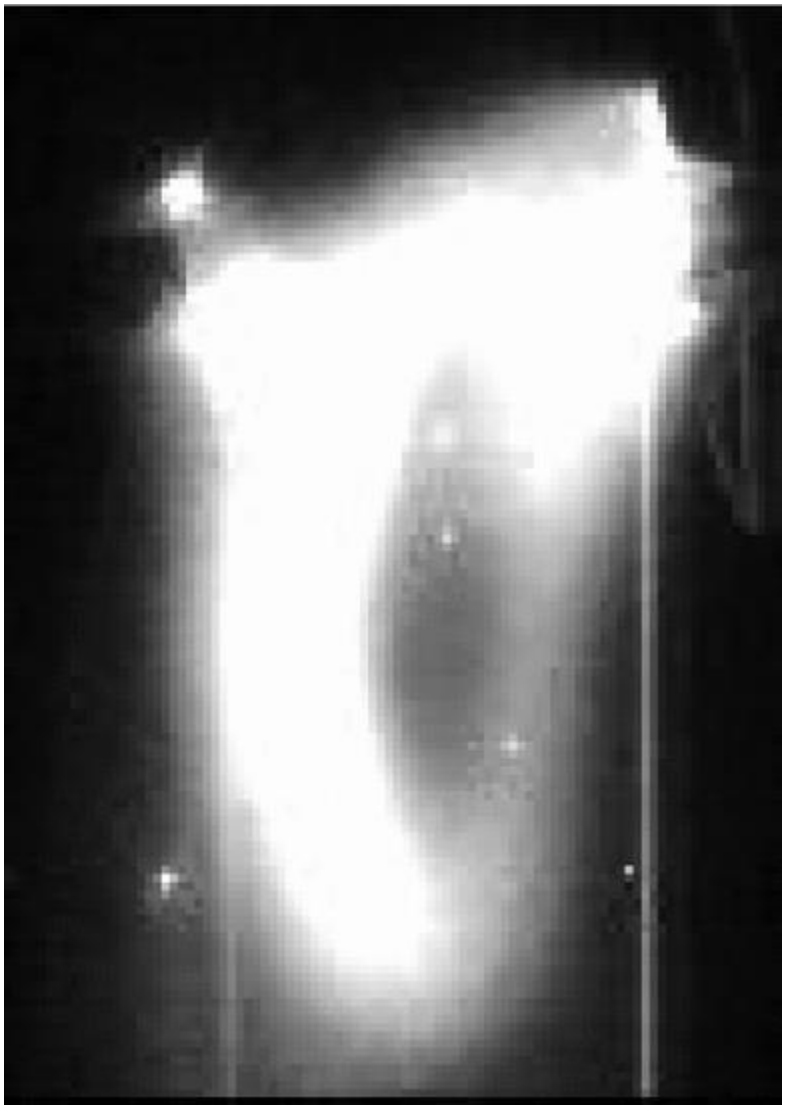

Fig. 2. A 7.9 cm Electron Spiral Toroid Spheromak moving away from the initiating arc at the top of the image.

The observation in Fig. 2 is consistent with the behavior of a smaller 0.5 cm ESTS, which for many years has been observed and reported to form from an arc, and then leave the arc while maintaining its shape, as seen in Fig. 3.

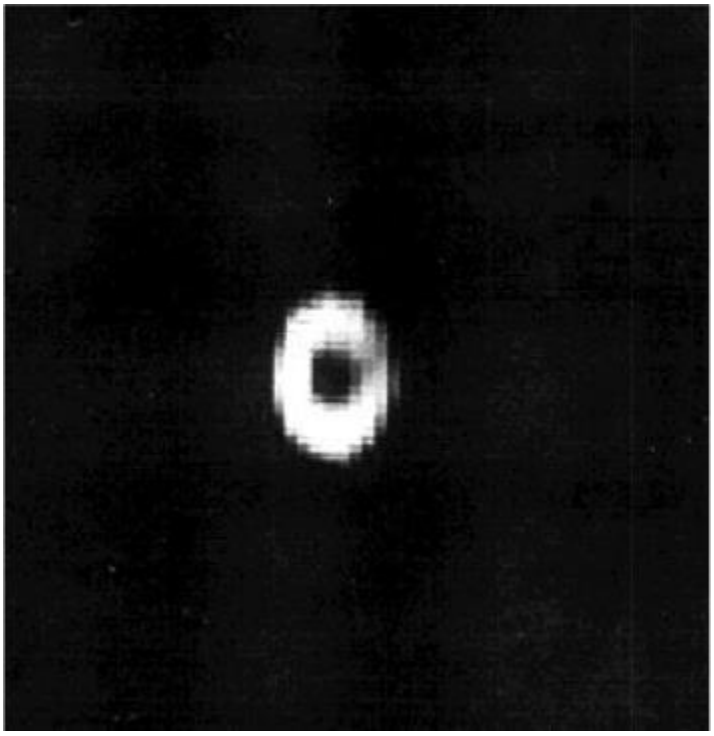

Fig. 3. A 0.5 cm ESTS observed during an electric arc experiment.

The ESTS in Fig. 3 is observed to endure for more than 200 milliseconds (msec) in 1/8 atmosphere of nitrogen before passing out of the field of view of the experiments. Pressures used have been in the range of 1/16 atmosphere to 1/2 atmosphere; although the upper limit has not been explored to date and it is expected that they can form in full atmosphere. ESTSs formed by an arc (as in Fig. 3) and leaving the arc are normally spinning rapidly after initiation. In Fig. 3 the spinning has been effectively slowed using a high-speed video camera at 1/10,000 second shutter speed. The size of the earliest ESTSs observed was 0.2 cm to 1.0 cm.[19]

Although the initial observations of small ESTSs were interesting, useful applications were seen to require a method to scale up the size of the ESTSs. A method was recently developed to scale up the ESTSs to 8 cm, as shown in Figs. 1 and 2. First, it was necessary to form stable arcs of high energy, which was done as shown in Fig. 4. The arcs accommodated currents in a wide range, from hundreds of amperes to a few thousand amperes. This range of currents will produce arcs with currents consistent with lightning events.[16]

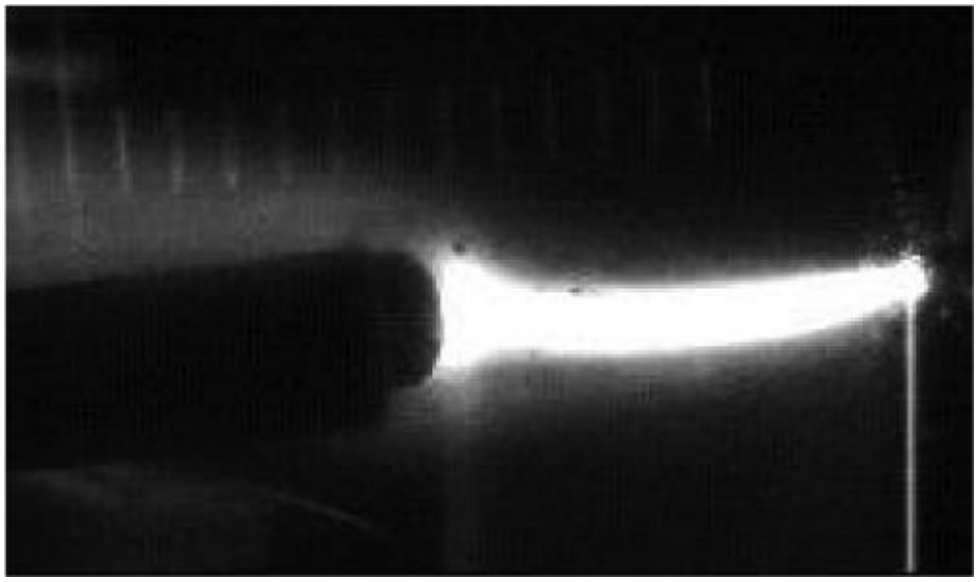

Fig. 4. A typical stable arc used to form an ESTS (note bell jar shield in upper left of image).

Using a combination of experiments and analysis, we recently found an arc arrangement that allowed us to form large spheromaks around the arc, as shown in Fig. 1. A typical large spheromak is shown in Fig. 2. Work continues to increase the density and to characterize more accurately the properties of these large spheromaks.

SECTION III
PROPOSED MODEL

During the ESTS initiation phase, electrons are observed to leave the arc and to begin to orbit around it. In the model presented here, ions are trapped within the electron orbits because ions are plentiful in and near the arc, due to the arc dynamics; ions also form outside the ESTS, near its surface, from collisions with neutrals. The role of the ions is important because they act to neutralize the space charge of the electrons. The ions internal to the ESTS also act to hold the electrons in orbit. The model is shown in Fig. 5.

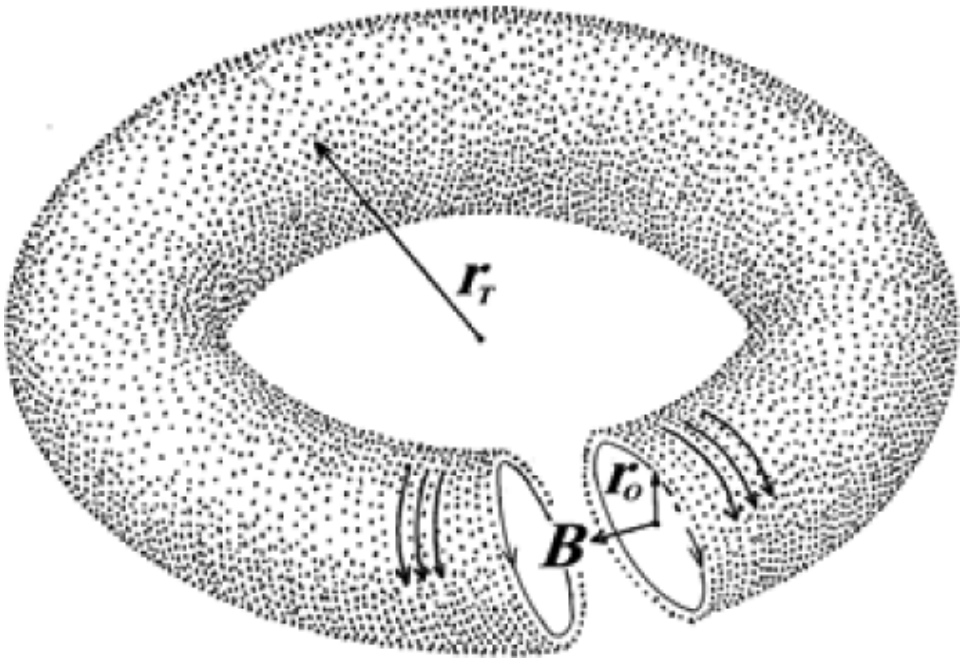

Fig. 5. The ESTS with parallel electron orbits and internal magnetic field.

The physics for the self-stable spheromak were first published by Chen,[18] followed by a set of engineering formulas published by Seward in 2001[19] with the solenoid field equation used to approximate the magnetic field inside the toroid:

$$B = \frac{\mu_0 i}{k_0 d_e} = \frac{\mu_0 e V}{k_0 d_e^2} \tag{1}$$

where -e is the electron charge, k_0 is the spacing between orbits, d_e is the electron distance, 'i' is the current and is equal to eVn/d_e where V is the electron velocity and n is the number of electrons. After the initiation phase, if conditions are correct and enough electrons form into the surface, the ESTS will transition into a state in which the forces reach equilibrium. In this way, collective forces are established within the toroid to stabilize its geometry.

The forces on a single electron can be defined. We assume for this model that the electrons form a thin toroidal shell, and therefore the force on a single electron from the other electrons is:

$$F_e = \frac{e^2}{\varepsilon_0 k_0 d_e^2} \tag{2}$$

The magnetic force on each electron due to the internal magnetic field is:

$$F_m = \frac{\mu_0 e^2 V^2}{k_0 d_e^2} = \frac{e^2 V^2}{\varepsilon_0 k_0 d_e^2 c^2} \tag{3}$$

The internal ions attract the electrons with a force:

$$F_i = \frac{e^2}{\varepsilon_0 k_0 d_i^2} \tag{4}$$

Where $d_e = f_i d_i$ is the ion distance and f_i is the ratio of ions to electrons. The force of rotation on each electron is:

$$F_r = \frac{mV^2}{r} \tag{5}$$

Where m is the electron mass and r is the electron orbit radius. The forces acting on the ions are, similarly:

$$F_{ion} + F_{rotation} = F_{magnetic} + F_{confinement} \tag{6}$$

Because F_r and F_m are small relative to F_i, this reduces to the following equality, which can be defined as the ion equilibrium condition:

$$\frac{e}{\varepsilon_0 k_0 d_i^2} = F_{containment} \tag{7}$$

This says that the ion equilibrium condition can be met with a containment force. In our model, we calculate that this is the atmospheric pressure in which the arc is formed. The atmospheric force on a single ion is:

$$F_P = P k_0 d_i^2 = F_{containment} \tag{8}$$

Where P is the pressure. For the ESTS to be in equilibrium, the forces on the electrons and ions must be in balance. For the electrons this is described as:

$$F_e - F_i + F_r + F_m = 0. \tag{9}$$

For the ions, this is described as:

$$F_i - F_P = 0 \tag{10}$$

Note that the sign of each force is relative to the surface of the ESTS.

The results of this analysis are consistent with the Virial theorem because the atmosphere pressure keeps the ESTS in equilibrium in atmosphere. A theoretical treatment of the stability of the plasma toroid in atmosphere has been completed,[18,21] and these two references should be read together because the first assumes a fixed ion background while the second considers the ion motion.

SECTION IV
APPLYING THE PROPOSED MODEL TO THE EXPERIMENTS

The observed data relative to the ESTS in Fig. 2 demonstrate the ESTS equilibrium of forces using the above equations and model. The first ESTS data and balance of forces were originally reported for 0.5 cm ESTSs.[19]

The radius of the toroid in Fig. 2 is observed as 0.033 m, and the radius of the electron orbit is observed as 0.0066 m, resulting in an overall diameter of 7.9 cm, with an aspect ratio of 5:1. The pressure is 0.125 atmospheres of nitrogen. The electron energy in the surface of the ESTS is estimated as 10^{-6} eV with electron velocity of 593 m/s.

With three assumptions we can calculate all of the forces in the model. The first assumption is that the electrons are equally spaced, providing a geometric ratio of orbit distance to electron distance of $k_0 = 0.87$. Second, the theoretical treatment assumes an ion fraction utilized in the theoretical treatment of 1.001.[18] Finally, d_e and d_i are assumed to be close, with d_i smaller by the ion fraction.

Because the background pressure provides the restoring force, using equation (9) above, d_e is calculated as 7.69 x 10^{-9} m, at which value the forces within the ESTS are in equilibrium.

The original proposed model demonstrated equilibrium for an electron surface of a single electron shell a single electron thick, and similarly, an ion surface a single ion thick.[19] The reason for this one shell was a tacit assumption that the ESTS contained only particles captured within the ESTS volume at time of formation. It turns out that observations suggest that this limitation is too restrictive. The ESTS forms around the arc and is seen to continue to accumulate charged particles for as long as initiating conditions remain in place, observed for a few hundreds of msec to date.

The model has been extended here to an ESTS with multiple thin shells. This suggests that an electron shell is the outermost surface, with an ion shell next, then an electron shell, then an ion shell, and so forth. The alternating electron and ion shells would maintain the charge neutrality. This series of shells would continue to accumulate as long as the force balance remains in equilibrium, which by this model would be limited by the total internal magnetic field strength because it increases with the increasing number of shells.

[21] W. J. Guss and C. Chen, "Equilibrium of self-organized electron spiral toroids", Phys. Plasmas, vol. 9, no. 8, pp. 3303-3311, 2002

The balance of forces holds for each shell. In addition, the number of shells sets the overall limit to the number of charged particles by setting the limit to the internal magnetic field, which acts to repel electrons. The example analyzed here achieves the balance of forces up to a maximum of 486 shells, and a total of 2.67 x 10^{-10} Coulombs of charged particles. The internal magnetic field at these values is 6.09 Tesla, using the formula for a closed solenoid.

The equations above have been incorporated into a computer model of the ESTS that is found to be useful to describe and predict the experimental results.

SECTION V
BALL LIGHTNING COMPARISON TO EXPERIMENTAL ESTS OBSERVATIONS

Ball lightning is seen to occur in atmosphere during or in the proximity of lightning events, and is reportedly in spherical form, or toroidal form.[14,15,16,22] The case is made here that ball lightning could be a spheromak. This is based mainly on the experiments reported here because they produce spheromaks that exhibit characteristics ascribed to ball lightning.

Many researchers have been intrigued by ball lightning because it has been reported thousands of times over the past 2,000 years. Researchers have offered explanations of ball lightning, but the non-reproducibility of ball lightning in atmosphere has made it difficult to reproduce it definitively in a laboratory or to develop its theoretical explanation[23]. Attempts using microwaves to produce ball lightning in atmosphere in laboratories, for example, have been reported.[24,25] Also reported have been attempts to use direct current discharges to produce ball lightning,[26,27,28] but there is, as yet, no consensus that these results provided a definitive ball lightning explanation[29].

Experiments reported here are based on producing lightning-level electric arcs in partial atmosphere. Initially, the experiments produced small, bright, spinning spheres that left the arc. In analysis of these with a high-speed camera at shutter speeds of 1/10,000 second, the spinning was found to be stopped, and the small, bright spheres were seen to be small rings or toroids. Based on these observations, Chen was able to derive the physics of a new class of plasma toroids, or spheromaks that remain stable in partial atmosphere with or without an external toroidal magnetic field for containment, as long as the density of the plasma toroid is greater than a critical value.[18]

It is interesting to compare the experimental observations with what is known about ball lightning. There are thousands of published reports of ball lightning sightings, as noted in the references, with Ohtsuki summarizing 2013 descriptions for example.[22] A summary of observed ball lightning properties is located on Wikipedia.org and includes: “They are generally spherical with fuzzy edges; their diameters range from 1–100 cm; their

---

[22] Y. H. Ohtsuki, Science of Ball Lightning (FireBall), pp. 1-318, 1988, World Scientific

[23] K. H. Tsui, “Ball lightning as a magnetostatic spherical force-free field plasmoid”, Phys. Plasmas, vol. 10, no. 10, pp. 4112-4117, 2003

[24] Y. H. Ohtsuki, “Plasma fireballs formed by microwave interference in air”, Nature, vol. 350, pp. 139-141, 1991

[25] K.D. Stephan, “Microwave generation of stable atmospheric-pressure fireballs in air”, Phys. Rev., vol. 74, pp. 055401-055405, 2006

[26] K.H. Tsui, C. E. Navia, M. B. Robba, L. T. Carneiro and S. E. Emelin, “Self-similar magnetohydrodynamic model for direct current dischargefireball experiments”, Phys. Plasmas, vol. 13, no. 11, pp. 113503-113511, 2006

[27] G. S. Paiva, A. C. Pav¿¿o, E. A. deVasconcelos, O. Mendes and E. F. da Silva, “Production of ball-lightning-like luminous balls by electrical discharges in silicon”, Phys. Rev. Lett., vol. 98, no. 4, pp. 048501-048505, 2007

[28] T. Ito, T. Tamura, M. A. Cappelli and S. Hamaguchi, “Structure of laboratory ball lightning”, Phys. Rev. E, vol. 80, no. 6, pp. 067401-067405, 2009

[29] M. Steinhoff, Ball Lightning: An Unsolved Problem in Atmospheric Physics, pp. 1-238, 2010, Plenum

brightness corresponds to that of a domestic lamp; many are described as having rotational motion." These are consistent with the experimental observations reported here.

The fuzzy edges are likely the ions formed around the edges as background gas neutrals collide with the ball lightning, and the same effect is seen around spheromaks during the experiments as seen in Fig. 1. The diameters reported are consistent with the computer model above, and the experiments to date have produced spheromaks of 0.2–14 cm, with no known upper limit. The brightness is consistent with observations of the experiments. Finally, the small ESTSs of Fig. 3 have always been observed as spinning during the experiments.

Of particular note here are reports that ball lightning does occur in ring form. Ohtsuki reported nine such observations, which appears to be a strong clue and perhaps even a confirmation that ball lightning may be a spheromak.[22] Note that a spinning ring with no holding forces applied will spin randomly about any of its three axes, and so a spinning ring might appear randomly as a sphere, or a band, or an oval, or a ring, all of which Ohtsuki reports. All of these shapes and more have been observed during experiments at EPS. As part of a research contract, our consultants produced a computer simulation of a spinning toroid and demonstrated that these and other shapes would be expected to occur.

The multiple shell model for the ESTS proposed above are also consistent with observations of ball lightning. The one observer who reportedly has witnessed the formation of ball lightning in air noted that the ball lightning formed while "blowing up like a balloon" over a period of several seconds.[17] He reported that the ball lightning was seen to come out of a telephone receiver, expand to about the size of a soccer ball over many seconds, then float around the room, gently bounce off his face (leaving no burn marks), and then settle on his mother's stomach (as she was lying on a bed); it ended with a loud bang, without hurting anyone.

What is observed during ESTS formation experiments is that the ESTS remains in place while forming, and under the right circumstances electrons and ions can be added, likely in outer shells, causing the density to increase visibly, as evidenced by the ESTS brightness increases. This would increase the overall total charge to a point greater than that contained in the original volume. The model allows for this possibility. The implication of this is that the ESTS ion density can be quite high, as predicted by the computer model; this is presently being studied experimentally.

A word of caution: The published observations of ball lightning are descriptions made by normal people under unusual circumstances, and as a result, have not yet led to a definitive explanation of ball lightning. The experimental observations reported here give a good picture of a stable plasma toroid, or spheromak, which resembles ball lightning. A definitive experiment to tie the two together would be interesting.

A suggested definitive experiment would be to record many lightning strikes at a tall building or antenna that repeatedly attracts lightning. A video camera with a fast shutter speed could be left over time in a weatherproof housing to record many strikes. With luck, a ball lightning would pass by and be recorded in stop action to reveal its toroidal shape. Note that care must be taken to set the light filtering of the event correctly, and experience indicates that two cameras would be better—one with a filter setting to observe the bright sphere, and the second at an appropriate filter setting and shutter speed to reduce the brightness in order to 'stop' the spinning.

SECTION VI
HIGH ION DENSITY MEASUREMENTS

Work has been completed to measure the density of the ESTS on a preliminary basis. Ion density was measured to be greater than 10^{17} ions/cm^3 with no confining toroidal magnetic field.

We first discovered that the formation of the ESTS caused a significant change in the current of the arc. Fig. 6 shows the normal arc current characteristic when no ESTS is present. The power supply is capacitive and exhibits the expected exponential curve. For explanation, the trace shows the characteristic of a drawn arc, with the electrodes touching at the start, the drawing apart, and, at approximately 360 msec the significant increase in current. This dual current approach is used to protect the electrodes at the start of the event.

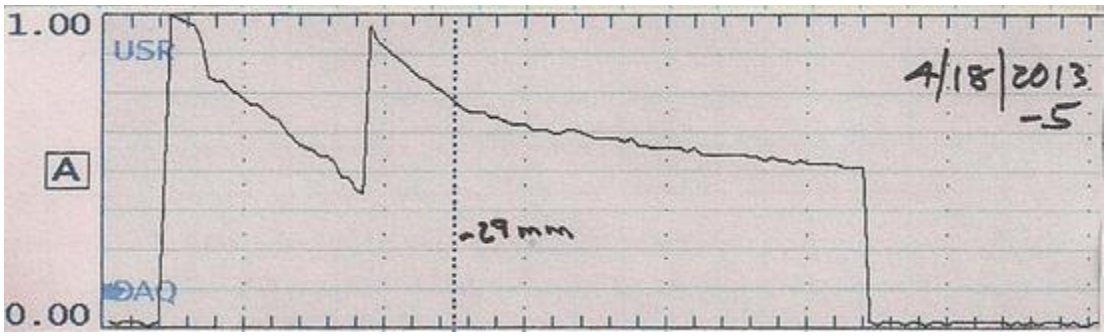

Fig. 6. Normal arc current characteristic when no ESTS is present; horizontal scale is 40 millisec/mark; vertical is 3.68 amperes/mm with 5 mm/mark; 4/18/2013–5 is the date and the experiment ID.

Fig. 7 demonstrates that the arc current undergoes a significant change that occurs at the time that the ESTS forms. This change in current is measured as 5 mm on this trace, but because three power supplies are used to reach the current required, and three traces are made during each event, the total current is measured as 18.4 amperes for 40 msec, or 0.737 Coulombs of charge per 40 msec. This current goes directly into the ESTS, which is consistent with the video observations. Because this is a charge neutral plasma and ESTS, no magnetic confinement is needed to hold this charge in place.

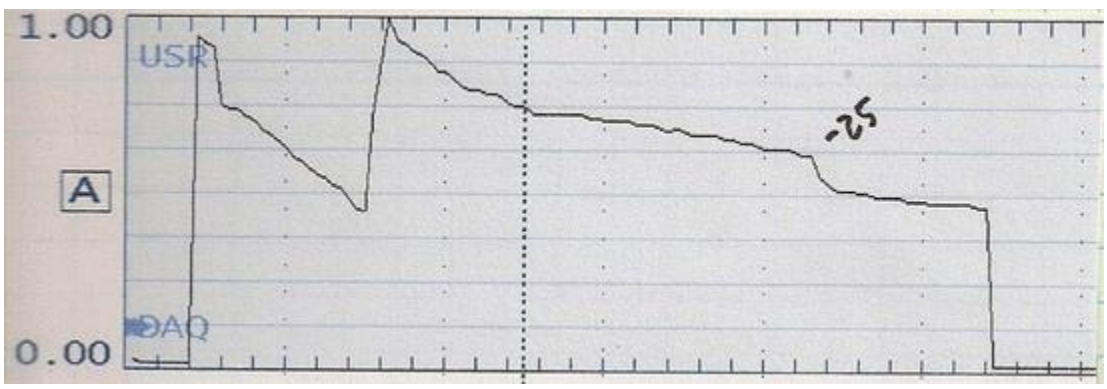

Fig. 7. A current trace showing the point of ESTS formation at 860 msec; the–25 at that point is the 25 mm current trace measurement, which equates to 92 amperes (for one of three identical power supplies).

The experiment ends at approximately 1,080 msec. In this case, the ESTS was still forming at 200 msec at the end of the experiment, for a full charge of 3.68 Coulombs.

The density of the ESTS can be estimated using this initial estimate of charged particles. The ESTS volume is calculated as 7.7×10^{-7} m^3 with toroid radius of 0.00625 m and orbit radius of 0.0025 m, as observed. The density in electrons/volume is calculated as 2.98×10^{25} electrons/m^3 or 2.98×10^{19} electrons/cm^3. Because the number of ions and electrons has to be essentially equal to ensure charge neutrality, the ion density is the same as the electron density, or 2.98×10^{19} ions/cm^3. More work is in progress to verify this initial set of results. The computer model calculates the density as greater than 10^{17} ions/cm^3 with conservative assumptions and supports densities greater than 10^{19} ions/cm^3.

Fig. 8 shows the ESTS at different times during the experiment. It is a side view only, and the shape is a band rather than the more characteristic toroidal shape of Figs. 1 –3. This set of images is from a different experiment than was either Fig. 6 or Fig. 7. Fig. 8 shows the increasing density with time, which appears visually as increased brightness. The density reduces late in the experiment as the power supply discharges and is unable to maintain the conditions necessary to increase the density. With a longer experiment we project that the density will increase above the critical density needed to remain stable, as seen in Fig. 3.

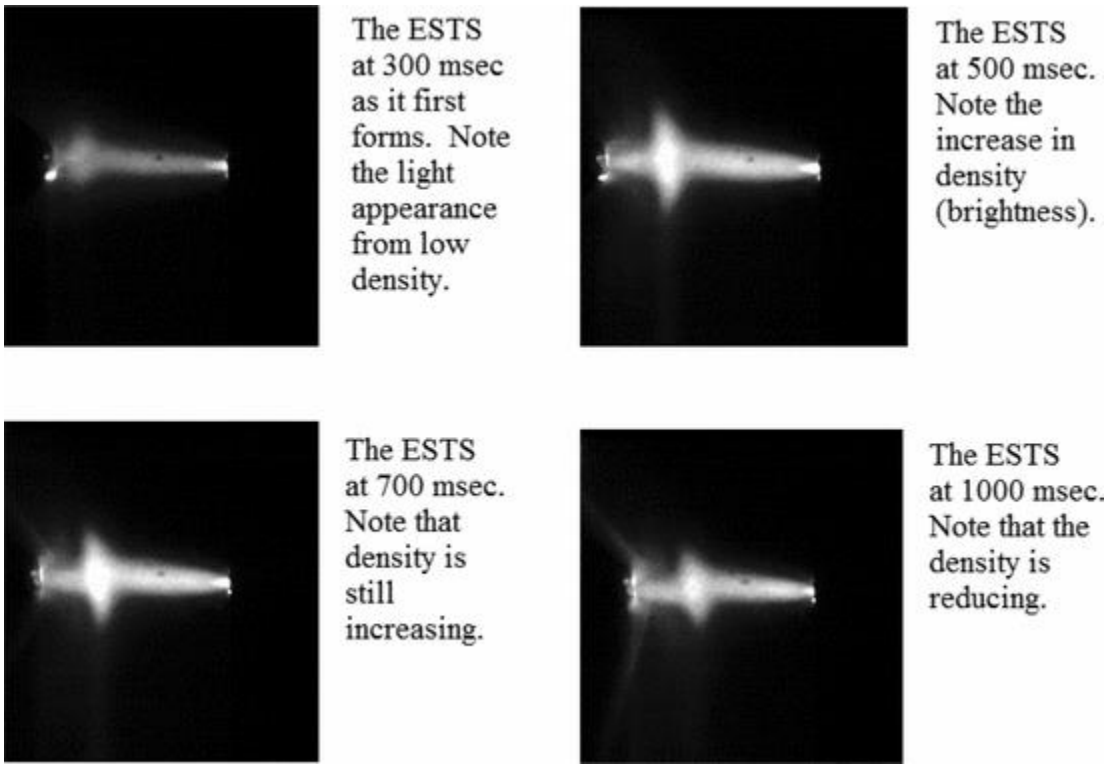

Fig. 8. Photos showing the ESTS at different times during the experiment, and the changes in density.

SECTION VII
FIELD REVERSED CONFIGURATION PLASMA TOROID

The ESTS is a new kind of Field Reversed Configuration (FRC) plasma toroid. An FRC plasma toroid is a plasma configuration starting as a plasma beam and then formed into a toroid by using externally applied magnetic fields. As the FRC plasma toroid forms, the internal magnetic field inside the plasma toroid is reversed compared to the externally applied magnetic fields.[30] The cited reference here is a particularly excellent reference on the Internet that provides further diagrams and discussion and is agreed to by a long list of notables in the FRC field.

There are two significant features of the ESTS that separate it from all other FRCs that we have seen reported to date. First, there are no externally applied magnets needed to shape the ESTS because the ESTS is formed around an electric arc, and the arc itself provides the shaping magnetic field under the proper circumstances. This one feature makes the ESTS initiator small in mass and size compared to all other reported approaches. The second feature of the ESTS is that it has high density – high enough that it will remain self-stable without any externally applied magnetic field containment as described by Chen. These two features have a significant positive impact on applications.

[30] L. C. Steinhauer, A White Paper on FRC Development, 1998, Univ. Washington

SECTION VIII
POTENTIAL APPLICATIONS

Work has been done to determine useful potential applications for the ESTS and several are briefly described here. The first potential application is an air defense beam, because the ESTS is stable in air and also can potentially be accelerated to high velocities (calculated as 600 Mach) to then hit a target at 65 Km distance in less than a second.[31]

The second potential application is a new method for creating X-rays, given that ESTSs have been accelerated in experiments and calculations show that they can potentially be accelerated and then stopped on a target to create X-rays across a wide range (of soft-to-hard X-rays) by controlling the acceleration of the ESTS.

The third potential application is an improved colliding spheromak fusion energy process. By comparison, the Tokamak approach can achieve approximately 10^{15} ions/cm^3. A colliding spheromak fusion process reported by Wells in the 1980's reportedly achieved ion densities of 10^{16} ions/cm^3.footnote.[32]. The ESTS is measured to have greater than 10^{19} ions/cm^3 on a preliminary basis potentially leading to an improved colliding ESTS fusion process. Because no confining toroidal magnetic field is needed, the apparatus needed for this is calculated to be similar in size to a neutron tube, and a potential product would be a 10 kW backup generator, which could potentially lead to a clean, practical fusion energy process and product.

Acknowledgements

The author would like to thank four investors: George Hegeman, Geoffrey Hegeman, Robert Hegeman, and John Drislane. Dr. Chiping Chen of MIT provided useful comments to the ESTS research over the years, and he completed the derivation of the physics during a project funded by the U.S. Missile Defense Agency, with the Massachusetts Institute of Technology (MIT) as the research institution.

Author

Clint Seward

Clint Seward (M'64–LM'07) was born in Nyack, NY, in 1941. He received the B.S. degree from the United States Military Academy and the M.S. degree in electrical engineering from the University of Michigan in 1963 and 1965, respectively.

He served with the United States Air Force from 1963 to 1969. He was involved in several major corporations in various engineering and marketing capacities until he retired in 1989 to start his own company. He was involved in energy products, and in 1992, he discovered a new plasma toroid, or spheromak, that remains stable in atmosphere with no external toroidal magnetic fields for containment. He made this discovery while searching for an explanation to Ball Lightning. He has written two books, five patents, and three papers.

[31] C. Seward, C. Chen and W. Guss, Electron spiral toroid (EST) for energy storage, 2002

[32] D. R. Wells, P. E. Ziajka and J. L. Tunstall, "Hydrodynamic confinement of thermonuclear plasmas", Fusion Technol., Vol. 9, 1986

High-Density Ions May Make Clean Fusion Energy a Reality

Electron Power Systems, Inc., (EPS) claims to have discovered the explanation for ball lightning. From that EPS has invented and protected with several patents a method of making clean fusion energy a reality by creating high-density ions. Safe, pollution-free fusion generators could reliably generate electricity with capacities ranging from 10 kilowatts through 1000 megawatts at the cost of 10% of today's electricity. All transportation vehicles could be reliably and safely powered with fusion generators with substantially lower production, operating and maintenance costs and without poisonous emissions. EPS expects to reduce the mass and cost of aircraft by 70% and space launch costs by more than 95%.

A clean energy generator that saves 80% of energy costs and produces no pollution.

By Clint Seward, Electron Power Systems, Inc; cseward@verizon.net

We have discovered a new plasma toroid, or ring, that remains stable in atmosphere **with no external magnetic field coils for containment**. Hundreds of the greatest labs throughout the world work with plasma rings trying to create fusion energy. We are the only ones who have discovered how to make plasma rings without magnetic containment. Scientists from MIT have published papers confirming the discovery. We call our discovery the Electron Spiral Toroid Spheromak (ESTS).

Here is how our discovery will be useful. We measure its ion density as 10,000 times greater than magnetically confined fusion processes such as Tokamaks, and enough for a clean energy process. Also, neutron tubes collide hydrogen isotopes (deuterium) and fuse them to produce neutrons, but low ion densities prevent the use of neutron tubes for energy production.

Other fusion processes are being researched around the world to try for a clean fusion energy solution, but low ion densities are their main barrier. We have found a way around that with our high-density ion technology. For example, Tokamaks can achieve 10^{15} ions/cm^3 – not high enough for a continuous fusion process. We measure 3.0×10^{19} ions/cm^3; 10,000 times better, and enough for clean fusion. For comparison, a Tokamak needs a large external toroidal magnetic containment which is costly and consumes a lot of power.

Based on this new discovery EPS is developing a clean energy generator for powering buildings, cars and vehicles with an 80% fuel cost savings while producing no pollution. This is potentially an ultra-high growth opportunity with a Microsoft-like long term result.

The home energy generator is calculated to be the size and cost of a Home Depot 10-kilowatt backup generator. The potential is for clean energy generators to run 24/7 for a year on one gallon of fuel, vs. 100,000 gallons of gasoline needed for today's fossil fueled generators.

We will do this by applying a new technology to improve the commercially available neutron tube to produce useful amounts of clean energy using a clean energy process. Neutron tubes are in use by the thousands for industrial and medical testing, but have technical limitations that prevent their use for energy. Our new technology will overcome the limitations. We are seeking seed investment to complete an energy demonstration within the next two years.

In addition, EPS technology provides near term sales opportunities with the DOE and the DOD and for licenses with large companies and utilities selling energy and energy products. We have begun responding to six specific identified opportunities.

We plan to improve the fusion process demonstrated by the TRISOPS project in the 1980's at the U of Miami. They collided two plasma toroids at low energy of 3keV and average ion densities of 10^{16} ions/cm^3 and produced low level fusion,[33] and with our higher densities now and even higher ion densities planned, we expect to improve on these results.

The physics of the EST itself is derived in two papers[34,35] and quoting from the first paper by MIT scientists: "It is found that a class of self-organized EST equilibria exists with or without an externally applied toroidal magnetic field. It is shown that in the absence of any applied toroidal magnetic field, the EST equilibria are stable at high electron densities, i.e., at high toroidal self-magnetic fields, although they are unstable at low electron densities, i.e., at low toroidal self-magnetic fields." The paper notes that the EST is essentially charge neutral, meaning it contains essentially the same number of ions and electrons. This new EST is a new plasma discovery, not reported elsewhere.

EPS recently achieved a breakthrough in EST initiation that allows its scale up. The first step in this new method was to learn how to consistently make stable electric arcs. Arc references instruct that arcs tend to form randomly from experiment to experiment even with identical conditions. We have learned how to overcome this as shown in Fig 1A.

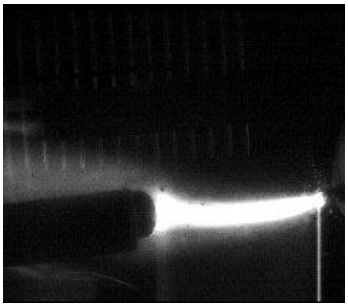

Fig. 1A stable arc in EPS lab

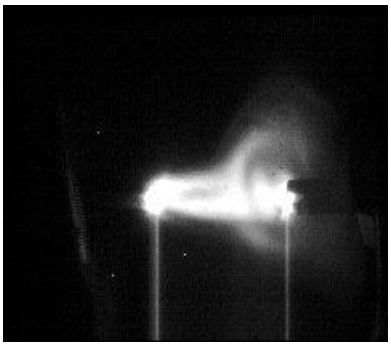

Fig 1B 8 cm ESTS formed around stable arc

Fig 1B shows an ESTS formed by modifying a stable arc path in a proprietary manner. The EST has ion density measured to be 10^{17} ions/cm^3. Note: The apparatus to form the ESTS is contained in an 18-inch bell jar, which demonstrates that initiation can be done on a small scale and needs no external toroidal magnetic field for containment.

Our computer model predicts the formation of the EST and closely matches the experimental results we see including the high density. It predicts higher density by orders of magnitude with simple adjustments to the experimental setup, but that prediction will need experimental verification. The computer model is based on well-known electrical engineering formulas published in two references.[36,37]

---

[33] Wells, D.R., P.E. Ziajka, and J.L. Tunstall. "Hydrodynamic Confinement of Thermonuclear Plasmas", Fusion Technology, Vol 9, 1986

[34] Chen, C., Pakter, R., Seward, D. C. "Equilibrium and Stability Properties of Self-Organized Electron Spiral Toroids", Physics of Plasmas; Vol. 8, No. 10, pp. 4441-4449, October 2001.

[35] Guss, William J., Chen, C. (2002), "Equilibrium of Self-Organized Electron Spiral Toroids," Physics of Plasmas, August 2002.

[36] Seward, C., "Ball Lightning Events Explained as Self-Stable Spinning High-Density Plasma Toroids or Atmospheric Spheromaks," IEEE Access, 5 March 2014.

[37] Seward, C. "Ball Lightning Explanation Leading to Clean Energy", Amazon.com

Potential Clean Energy Supply:
Based on the high ion density results we see, we plan to develop a Clean Energy Supply using a new clean neutron tube design. It will potentially reduce fuel mass for electric generators by four orders of magnitude since it will not use fossil fuels, and will therefor greatly reduce the fuel requirements of local generators. The potential: It will run 24/7 a 10kW generator for a year on one gallon of fuel, vs. 7400 gallons of gasoline. This will be the first planned product with this technology and can potentially be scaled up to large generators and to power supplies for weapons systems. There will likely be a fuel cost savings of 80%.

This project will apply new technology to improve the commercially available neutron tube technology to increase neutron tube energy output by overcoming commercial neutron tube limitations. There are several thousand neutron tubes in use today that safely collide deuterium ions to produce neutrons, which are used for medical testing, industrial process control, and homeland security.

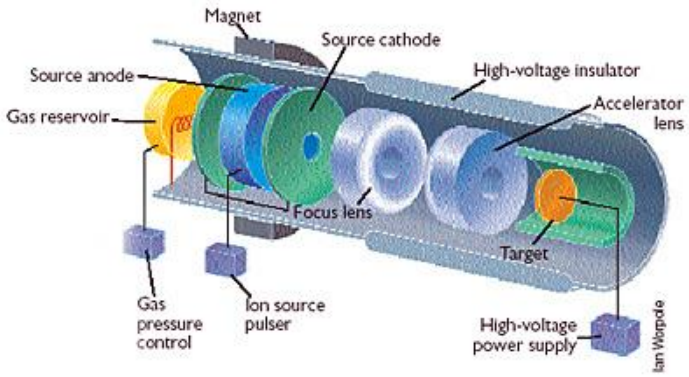

Fig. 2 One-meter long Neutron Tube schematic, from Dec. 2003 *Industrial Physicist*

Fig. 2 shows today's neutron tube schematically. An ion source produces hydrogen ions (deuterium), which are accelerated to 110 kV, then directed to hit a metal target that contains absorbed hydrogen (also deuterium). Collisions within the target produce neutrons, and also energy. The limitations of the target limit the energy output. It is a thin metal target that reduces collision efficiency and also allows excessive heat buildup with no straightforward way to remove heat. Note: This fusion process needs no external toroidal magnetic containment.

EPS plans to develop a replacement to the limiting target with a new target based on the EST to provide an increase in the amount of energy produced. The beam will be replaced with a second plasma toroid, using an adaptation of the TRISOPS colliding plasma toroid fusion process. This will be Phase One of EPS's project. This will be done in a one half meter long configuration and will overcome the neutron tube target limitations using EPS's proprietary methods.

Phase Two will substitute a clean energy process to eliminate neutrons by replacing deuterium with boron/ hydrogen. Phase Three will increase power output to 10kW to build a first prototype similar to a Home Depot backup generator. The generator can be scaled up to higher outputs to be used in many systems.

Recent breakthroughs in data and analysis at EPS provide a high confidence that this project will produce a lab energy demonstration and a prototype in two years, assuming funding is in place.[4]

New Space Propulsion Technology to Lift Payloads into Orbit with 99% Cost Savings per Kilogram

Title: **New Space Propulsion Technology to Lift Payloads into Orbit with 99% Cost Savings per Kg**
March 2012

Author: Clint Seward; Electron Power Systems, Inc.; Acton, MA 01720
E-Mail: dcsiii@aol.com; Phone: 978 263-3871

Engineer: C. Seward, Project Manager (978 263-3871)

Abstract:

A new propulsion technology has the potential to lift payloads into orbit for $100 per pound, compared to about $10,000 per pound today. As an example, calculations show they will replace 8,000,000 pounds of hydrocarbon fuel with one pound of fuel. This would reduce the takeoff fuel mass of a launch vehicle by 99%.

The basis for this technology is stable plasma toroid, called Electron Spiral Toroid (EST), that remains stable in partial atmosphere with no magnetic fields for containment. This new plasma toroid discovery was recently confirmed by MIT scientists[38,39] as part of a recent MDA (BMDO) STTR contract.

The TRISOPS project succeeded in producing fusion in the late 1970's by colliding two plasma toroids. TRISOPS could only produce small amounts of energy due to plasma toroid limitations, and so the project was almost forgotten. Newly discovered electron spiral toroid (EST) technology will potentially overcome the TRISOPS limitations to produce a practical microfusion reactor.

As an example, Earth-to-orbit launch vehicles could potentially use microfusion energy in place of fuel combustion – thus reducing launch vehicle fuel mass at liftoff by about 99%. First, a jet/ramjet engine would heat air for thrust using fusion energy instead of combustion, reducing by 10,000 times the fuel load mass to fly from 0 km to 100 km. Secondly, air is heated and used for lift-off propellant instead of on-board propellant. Launch vehicle velocity could achieve orbit velocity at 100 km using NASA Hyper-X technology, which achieved manageable skin temperatures at 30.5 km and 3212 meters/second. Increasing to orbit velocity of 7671 meters/second at 100 km should be achievable.

Technology readiness level is 3. TRISOPS produced fusion. EST's are produced in the lab, and MIT scientists confirmed the EST physics on a recent STTR project. EST's are accelerated using magnetic coils. Design calculations are completed. What remains to be done is to build a prototype in the lab. A project will reach TRL 4 within two years.

[38] Chen, C., Pakter, R., Seward, D. C., "Equilibrium and Stability Properties of Self-Organized Electron Spiral Toroids." Physics of Plasmas. Vol. 8, No. 10, pp. 4441-4449.
[39] Guss, William J., Chen, C. (2002), "Equilibrium of Self-Organized Electron Spiral Toroids." Physics of Plasmas. August 2002.

Background

EST's are plasma toroids that remain stable in partial atmosphere with no external magnetic fields for containment. EST's are observed to remain stable for hundreds of milliseconds with no external magnetic fields.[40] Normal plasma rings dissipate in tens of microseconds.[41,42] A CCD image of an EST is shown in Fig. 1. An electric arc generates the EST since high current is essential to obtain a large number of electrons to achieve the high densities required for stability. We use commercially available arc furnace electrodes. EST physics has been detailed,[38,39] and engineering equations have been detailed.[43]

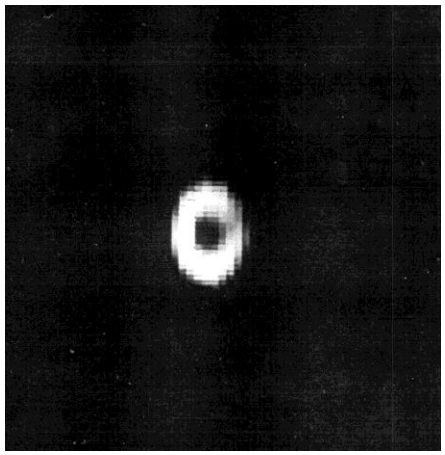

Figure 1. An Electron Spiral Toroid captured at 1/10,000 shutter speed.

The electric arc to make EST's is simple to form. Electrodes touch at the start of an arc event. Voltage and current are applied. A motor draws the electrodes apart, forming an electric arc. The electrodes carry arc-furnace level high currents of 100 to 4,000 amperes, depending on the experiment. The arc event is initiated within a vacuum chamber (bell jar) in order to control the background gas pressure. The arc approximates a lightning event.

The EST has an internal magnetic field, which allows us to use magnetic field pressure to accelerate EST's to add kinetic energy. Because the EST is stable in partial atmosphere it could potentially be accelerated over hundreds of milliseconds. This is potentially important because it will allow us to add large amounts of kinetic energy prior to colliding the EST's in order to raise EST's to the energy levels needed for fusion.

EST's also have nearly equal amounts of electron and ionic charge and so are charge neutral.

NASA commissioned a review of the technology in 2000.[44] The reviewer agreed, "… There is undeniable experimental evidence [from EPS's experiments] of [plasma toroidal] structures …". The reviewer stated that the ion stability question had not been treated sufficiently in the papers published at that time, and this has since been answered in two new papers,[38] and[39] as part of the MIT effort on the DTRA contract. Also since then the stability property of the observed EST's has been calculated using engineering formulas derived in part from the

---

[40] Seward, C., Chen, C., Guss, W., Seward, DC., "Electron Spiral Toroid (EST) for Energy Storage." Final report for DTRA contract no. DTRA01-99-C-0095.

[41] Wells, D.R., P.E. Ziajka, and J.L. Tunstall. Hydrodynamic Confinement of Thermonuclear Plasmas. Fusion Technology. V 9, 1986

[42] Degnan, J. H. *et al*., "Compact Toroid Formation, Compression, and Acceleration," Physics of Fluids B5, 2938 (1993).

[43] Seward, C., Chen, C., Ware, K. (2001). "Ball Lightning Explained as a Stable Plasma Toroid." PPPS-2001 Pulsed Power Plasma Science Conference. June 2001.

[44] Mountain State Engineering. Cambier, J., Micheletti, D. of MSE Technology. "Theoretical Analysis of the Electron Spiral Toroid Concept." NASA/CR-2000-210654.

NASA review and as a special case of Chen's derivations.[43] This is a significant step for enabling progress on the engineering applications.

How we accelerate the EST's to add energy

We accelerate EST's using magnetic field pressure in order to add directed kinetic energy to the EST's to raise them to fusion energy level. As reported on the recent DTRA project, we added coils to the EST initiator apparatus, and then observed the acceleration of the EST's[40] for 18 milliseconds, which can be readily extended to hundreds of milliseconds. This acceleration capability to add energy to the EST can be thought of as an improvement to the Shiva-Star project that accelerated compact toroids (CT's) at the AFRL. We calculate that we can accelerate EST's to 2 x 10^6 m/s, the energy levels reported by the AFRL.[45]

Since the CT and the EST both have toroidal shapes, they can be accelerated along a central guide,[42] located along a centerline to ensure they will always strike their target with 100% certainty. One difference between EST's and CT's is that EST's can be accelerated with a smaller power supply than the present CT's, which is very important for a small, mobile fusion power supply. This is because the AFRL CT's are accelerated in 20 microseconds,[42] necessary because they only endure for 40 microseconds. In contrast the EST's last for hundreds of milliseconds.[40] On our recent DTRA project, for example, we reported that we accelerated the EST's for 18 milliseconds, which can potentially be extended to hundreds of milliseconds. Thus, while Shiva-Star reports using a large pulsed power supply to accelerate the CT, the EST can use a time 900 times longer, with 900 times less magnitude to achieve the same energy and reducing the power supply size and cost to that of a commercially available power supply.

What we include in a full proposal

*The EST density is much greater than TRISOPS or Shiva-Star plasma toroids since the background gas acts to compress the EST.[43]

*The EST can be accelerated to fusion energy levels using methods similar to Shiva-Star. We have MIT computer simulations and a lab apparatus design to accomplish this.

*The EST has been observed to remain stable for hundreds of milliseconds. We extend the TRISOPS work with calculations to demonstrate the EST fusion reaction will provide net energy. *TRISOPS collided plasma rings to produce fusion. We analyze their method and data. Applying the EST to the TRISOPS will overcome the TRISOPS limitations and produce useable fusion.

*We provide calculations to show that a small, mobile fusion reactor will replace 30,000 pounds of jet fuel with 2.2 pounds of fusion fuel. We provide calculations for aircraft and other vehicles.

*We detail the Tasks to prove the feasibility of the EST TRISOPS concept. Each task is an incremental step that applies the patented EST to the vast amount of work by others.

*We discuss the technical risks and the feasibility of the approach.

*We provide copies of excerpts of the key references.

---

[45] Hammer, J. H., et al., 1988, "Experimental Demonstration of Acceleration and Focusing of Magnetically Confined Plasma Rings," Phys. Rev. Lett. **61**, 2843.

Technology Readiness Level and Level of Risk

1. Can the EST be accelerated to 2 x 10^6 m/s? This has been done with CT's at AFRL, and Chen calculates that the AFRL results are readily achievable.

2. What is the collisional probability for the ions with this method, and can we get net energy production? TRISOPS collided two plasma rings and achieved fusion. We will improve TRISOPS results.

3. Will the resulting power supply be practical? Our calculations show that the small, mobile fusion reactor will achieve net energy production. We will replace 30,000 pounds of jet fuel with 2.2 pounds of fusion fuel.

4. Technology Readiness Level: TRL 1 is Basic research, and we are passed this level. TRL2 is Technology Concept Formulated, and we have done this. TRL3 is Critical Function proof-of-concept completed, where fusion was demonstrated by TRISOPS, acceleration of EST's is observed, and marrying of EST's with TRISOPS remains to be done to move from TRL3 to TRL4.

Company Information and Facilities

Electron Power Systems, Inc. (EPS) maintains offices and a lab in Acton, MA. MIT Plasma Science and Fusion Center has been an STTR research collaborator with EPS.

Patent

Seward, D. C., Chen, C. Temkin, R. Energy Storage Device; US Pat.6,140,752.

Ball Lightning and Self-Confined Thermonuclear Reactions

Ball lightning characteristics, theories and experiments are discussed. The long lifetime of ball lightning in an otherwise explosive situation suggests that perhaps the confinement mechanism represents processes that could be exploited to confine sustained thermonuclear reactions. A mathematical model of ball lightning treating it as a quasi-superconducting sphere is presented.

A simple ball lightning fusion reactor is designed that has hundreds of kilo-amperes discharged through two electrodes. The electric field between the electrodes will polarize the discharge plasma into an upper half with negative space charge and a lower half with positive space charge. Magnetic fields turn the plasma sphere into a hydro-magnetic capacitor. A gas jet is initiated which blows the discharge plasma from between the electrodes to the more spacious reaction chamber. Another gas jet then supports and stabilizes the plasma sphere in the reaction chamber. Once the plasma ball is in the reaction chamber thermonuclear fuel is added to the ambient atmosphere. The fuel enters the plasma ball through diffusion and the meridianal circulation carries it to the hot thermonuclear center where release of nuclear energy sustains the reaction.

Gary Vesperman suggests substituting cold electricity for the massive current between the electrodes to possibly greatly increase the thermonuclear reaction's energy efficiency.

Superpositive charging of hydrogen will align it to crystalline structure for a few seconds. During this period, any electrical spark will fuse the atoms of hydrogen with great speed. Gary Vesperman suggests experimenting with Mike Hanson's crystallized hydrogen or even deuterium for thermonuclear fuel.

The following report was originally published in the Proceedings of the 1986 International Tesla Society Symposium, pp. 3-31 through 3-38. The author is Jack Y. Dea, Ph.D., 315 E. 14th Street, Tempe, AZ 85281.

Introduction

Ball lightning is a phenomenon that has been reported since ancient times. Acrostic art depicts such types of lightning, and Aristotle wrote a discussion on ball lightning in his work on meteorology in the fourth century B.C. (Singer 1971, p. 5). lt is a relatively rare phenomenon, but its occurrence is frequent enough that its existence cannot be doubted. Modern reports and discussions on ball lightning are numerous. The collected references from two source books alone number well over 2000 (Barry 1980, Singer 1971). lt is a curious state of affairs that whereas ordinary lightning is fairly well understood in principle, ball lightning is a phenomenon that is far from being well understood. Ball lightning has engaged the attention of leading scientists such as Boyle, Faraday, Arrhenius and Kapitza, but little unanimity of opinion is found on this subject. The many theories that have been proposed each succeeded in explaining a few properties of ball lightning but often ignored others.

This state of uncertainty in our understanding of ball lightning, however, presents an opportunity to learn more of its nature. Perhaps a new qualitative understanding will arise from ball lightning research; that of long-range coherence in high temperature plasmas. A better understanding can also lead to a better treatment of the highly nonlinear equations which describe high temperature plasmas. The most important consideration, however, is the prospect of sustained thermonuclear reactions derived from a self-confined plasma. The Lawson criterion for sustained thermonuclear reaction for a 30-kev plasma is $n\tau = 10^{14}$ sec/cm^3, where n is plasma density and τ is confinement time (McGraw-Hill Encyclopedia of Physics, 1983, p. 541). For ball lightning which floats in the atmosphere its density is roughly that of the surrounding air which is 3×10^{19} /cm^3. For a fully ionized ball, the minimum confinement time for thermonuclear reactions is then $\tau = 3 \times 10^{-6}$ sec or 3 microseconds.

The observed lifetimes of ball lightning is 1 second to a minute or so. Thus, ball lightning can provide long confinement times. There are a number of papers which purport to show that some ball lightning events are sustained by nuclear reactions, or that the ball lightning mechanism can sustain nuclear reactions (Altschuler et al., 1970; Dauvillier, 1965, 1970; Dmitriev, 1969; Hill and Sowby, 1970; Snigier, 1976; Kapitza, 1970). An additional list of references can be found in Singer (1971, p. 165). A very interesting and convincing paper gives a relatively simple theory of ball lightning and provides fusion reactor concepts (Dijkhuis, 1979). Part of the remainder of this paper will be devoted to a discussion of the Dijkhuis paper.

A Short Summary of Ball Lightning Characteristics, Theories and Experiments

Ball lightning is usually observed during stormy conditions and associated with lightning. However, some observations were made during fair weather conditions. In some cases, it is seen to descend from the air, but more frequently it is seen near ground level after cloud-to-ground lightning discharges. lt hovers or meanders and can enter buildings through cracks or windows. Puzzling aspects of this phenomena are the observation of the penetration of ball lightning through barriers, such as window glass and walls, and the creation of ball lightning inside a room. Ball lightning often exhibits a hissing sound, and its color varies from red to white to blue with the red color predominating. A more complete listing of ball lightning characteristics can be found in Appendix A.

Theories of ball lightning are numerous (Singer, 1971; Barry, 1980; Ritchie, 1961). Chemical reaction theories have lightning igniting or creating combustible substances in the air such as methane, propane, and benzene. The charged cloud theories have ball lightning as a collection of glowing charged dust and droplet particies presumably heated by lightning. DC discharge theories have DC currents exciting metastable states in atmospheric molecules. Plasma theories have ball lightning as a Iong-lived plasma ball or plasmoid with the

recombination rate somehow reduced. Nuclear theories have ball lightning sustained by nuclear reactions initiated by high-energy protons from lightning or from cosmic rays. Electromagnetic heating theories have ball lightning created and sustained by focus microwave radiation in the environment. Except for the electromagnetic heating theories, most of the theories tend to have difficulty in explaining the long life times of ball lightning. However, electromagnetic heating theories cannot explain the occurrence of ball lightning inside airplanes which have their interiors shielded (Dijkhuis, 1980).

Laboratory generated ball lightning is an even rarer phenomena than natural ball lightning. However, luminous globes have been observed from DC discharges (Plante, 1890), AC Tesla coil discharges (Kovac, 1984), and RF heating (Powell and Finkelstein, 1970). Summaries of other experiment works are given in Barry (1980) and Singer (1971).

The Confinement Problem in Ball Lightning and Hot Plasmas

lt is well known that laboratories in this country and abroad are attempting to induce nuclear fusion through confinement of hot plasmas. The two most popular concepts involve magnetic confinement and inertial confinement. However, other concepts do exist. Rauscher (1984) suggested that plasma instabilities may be overcome through a better understanding of their nature. lt is argued that plasma instabilities are actually stable growth modes in the plasma. These modes are actually dispersive but contain a mechanism for recoherence through a nonlinear term. lt was then suggested that these unstable modes be monitored and nonlinear pulse fields applied to disperse these modes through a feedback network.

Another mechanism for plasma confinement may be found in nature's ball lightning. The long lifetime of ball lightning in an otherwise explosive situation suggests that perhaps the confinement mechanism represents processes not yet formulated. lt can be speculated that ball lightning represents a quasi-superconducting state in which charges are carried by boson-like particles (solitary waves) which decrease ohmic losses. A very qualitative theory of this sort does exist and will now be described.

A Ball Lightning Model

A lightning discharge produces both a plasma and a magnetic field. The magnetic field will decay in the plasma, and its energy will go into ohmic heating. The time scale of the collapse of the magnetic field is given by the magnetic diffusion time (Chen 1985, p. 205).

$$\tau = \mu\sigma L^2 \qquad (1)$$

Where μ is the magnetic permeability, σ the electrical conductivity and L a typical length scale (diameter of lightning stroke). Using $\mu = \mu_0 = 4\pi \text{ X } 10^{-7}$ N/A^2, $\sigma = 1.8 \text{ X } 10^4$ S/M, and L = 10 cm yields a magnetic time of 2 x 10^{-4} seconds. This time scale is very much shorter than that of ball lightning.

Dijkhuis (1979, 1980) has proposed a simple model for ball lightnig. He argued that in analogy with superconductivity, τ may be increased by increasing σ. This can occur if charge transfer is not carried by electrons and ions but by charged fluid parcels. The fluid parcels are rotating charged vortices and behave macroscopically the way bosons do on the atomic level. A simple derivation of the existence of vortices can be obtained by assuming the plasma obeys the London equation

$$J = A/\mu\lambda^2 \tag{2}$$

here J is current density, A is the vector potential, and λ the London penetration depth, respectively. A plasma parcel with charge density ρ and velocity $\vec{v}$ has a convection current ρv. Letting $J = \rho\vec{v}$ and taking the curl of both sides of (2) results in a vorticity equation

$$\rho\nabla \times \vec{v} = \frac{-\vec{B}}{\mu\lambda^2} \tag{3}$$

where $\vec{V}$ x $\vec{v}$ is the vorticity and is opposed to **B** (diamagnetic behavior). Collective motion of electrons and ions on length scales smaller than one Debye length are dissipated by Landau damping and local deviations from charge neutrality are screened out on length scales larger than one Debye length. Thus it is argued that the size of the charged vortices lies around one Debye length.

Feynman (1966) has shown that a fluid of charged bosons has potential energy of the form $\vec{V}^2\sqrt{\rho}\,/\sqrt{\rho}$, where ρ is charge density or equivalently, mass density. In a density stratified plasma a potential energy of the form $U = -c\vec{V}^2\sqrt{\rho}\,/\sqrt{\rho}$ (c>0) can be assumed. The plasma vortices interact with each other via a force field $F = -\vec{V}U = \vec{V}c\vec{V}^2\sqrt{\rho}\,/\sqrt{\rho}$. In hydrostatic equilibrium the force field is balanced by pressure, hence

$$O = -\frac{1}{\rho}\nabla P + \nabla c\frac{\nabla^2\sqrt{\rho}}{\sqrt{\rho}} \tag{4}$$

A spherical symmetric, non-singular, isobaric (P = constant) solution with negative potential energy $U = -K^2c$ is

$$\sqrt{\rho} = \sqrt{\rho_c}\,\frac{\sinh(Kr)}{Kr} \tag{5}$$

where ρ_c denotes the central core density and 1/K is a length scale. Equation (5) represents a plasma sphere (ball lightning) with a hot and tenuous central region surrounded by a cooler and more dense outer region.

The optical opacity of plasma has a $\rho T^{-3.5}$ dependence on density and temperature (Kramer opacity). For a lightning ball whose average density is that of atmospheric density it has been calculated that the central region is transparent but the outer region is opaque. Hence in this model radiative cooling is minimized.

Ball Lightning Fusion Reactor

lt is believed that the ball lightning model presented may be realized through large current discharge between two electrodes (Dijkhuis, 1979). Recent experiments with high current discharges have observed the occurrence of ball lightning and even captured one event on photograph (Golka, 1984). Hence it is not unreasonable that this scheme can generate ball lightning.

Dijkhuis (1979) proposed that hundreds of kilo-amperes be discharged through two electrodes. A schematic drawing and equivalent circuit is shown in Figure 1 below. (Gary Vesperman suggests experimenting with discharging cold electricity (see below) between the two electrodes which possibly could require far less power than a hot electric arc such as those produced by arc welders.)

The electric field between the electrodes P, and Q, will polarize the discharge plasma into an upper half with negative space charge and a lower half with positive space charge. The discharge current is in the z-direction, and the **B** field lines circle the z-direction as shown. However, from equation (3), fluid currents circle the **B** field lines. The net effect is meridianal circulation from the two polar regions to the equatorial regions. This turns the plasma sphere into a hydromagnetic capacitor. Hence the equivalent circuit shown in Figure lb.

The ignition sequence is shown in Figure 2.

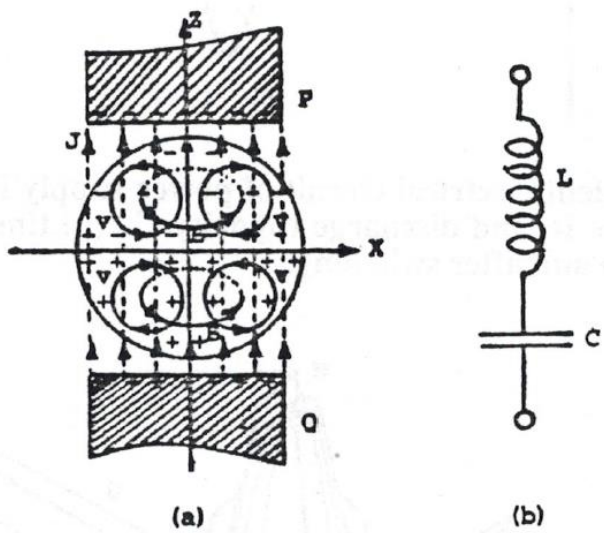

Figure 1. (a) Schematic view of discharge current J, magnetic field B and streamlines v during formation of a ball lightning (b) equivalent electrical circuit with circuit inductance L and discharge capacity C.

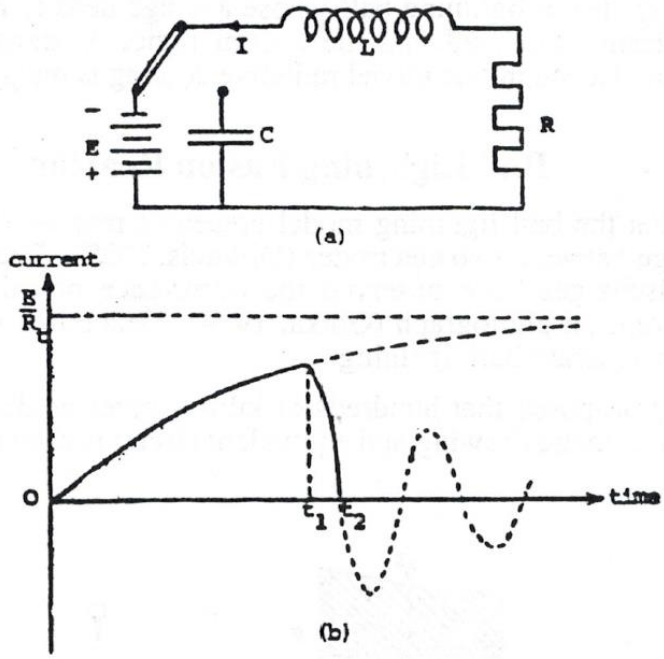

Figure 2. (a) Equivalent electrical circuit of power supply E, circuit inductance L and resistance R, and discharge capacity C. (b) time dependence of the current I before and after switching.

At t=0 the power supply, E, charges the circuit and stores the energy in the magnetic field. At time t_1 the switch disconnects the power supply and connects the capacitor (the two electrodes) to the circuit. The magnetic energy is turned into electrical energy until maximum discharge at t_2. At this point a gas jet is initiated which blows the discharge plasma from between the electrodes to the more spacious reaction chamber 'U' shown in Figure 3.

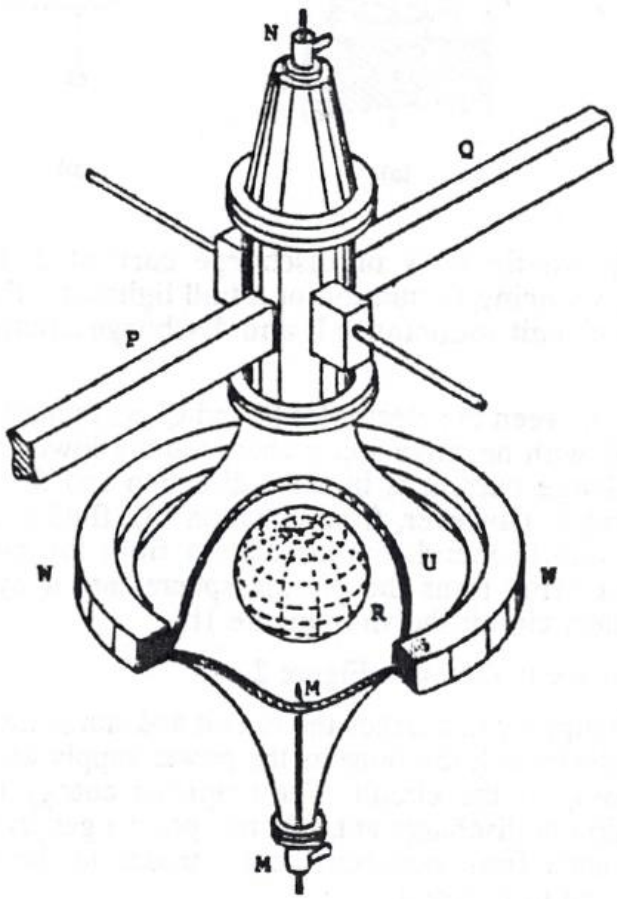

Figure 3. Cut-away view of reaction chamber "U" showing central plasma sphere R in equilibrium position.

Another jet from 'M' supports and stabilizes the plasma sphere in the reaction chamber. lt is not necessary that the initial plasma ball contain thermonuclear fuel such as a mixture of hydrogen isotopes. However, once the plasma ball is in the reaction chamber thermonuclear fuel is added to the ambient atmosphere. The fuel enters the plasma ball through diffusion and the meridianal circulation carries it to the hot thermonuclear center where release of nuclear energy sustains the reaction. Reaction products are carried to the surface by the meridianal flow and escape by diffusion to exhaust ring 'W.' lt is understood that a patent is pending on this scheme.

(Mike Hanson has provided his description and schematic of a 'hydrogen charging vessel' (see below). Superpositive charging of hydrogen will align it to crystalline structure for a few seconds. During this period, any electrical spark will fuse the atoms of hydrogen with great speed. Gary Vesperman suggests experimenting with crystallized hydrogen or even deuterium for thermonuclear fuel.)

Conclusion

A brief description of ball lightning and the problem of self-confinement has been presented. As of this date there is no consensus of opinion on the true nature of ball lightning. However, a simple model of ball lightning treating it as a quasi-superconducting sphere has been presented. An equally simple fusion reactor scheme based on this simple model has also been presented. lt would be of tremendous interest to follow up on the progress of these ideas.

Appendix A
List of Ball Lightning Characteristics (Singer, 1971)

1. Ball lightning is a rare, long-lasting electric discharge in ball form (less often in pear shape, among others) which is relatively more frequent in winter storms and occurs at the end of the storm. Its effects are weaker than those of linear lightning.
2. Ball lightning usually appears as a red, glowing ball or hollow ball of 10-20 cm diameter surrounded by a blue contrasting area and with vague borders. lt can occasionally be blindingly white and sharply defined.
3. A hissing, buzzing, or fluttering noise can be heard.
4. After it disappears there is often left behind a sharp-smelling mist which appears brown in transmitted light, blue in reflected light, or white in moist air.
5. Its lifetime varies from the shortest fraction of a second up to several minutes; most often it lasts 3-5 sec.
6. Ball lightning may appear from the bottom of a cloud or floating free in the air or attached to some object. Often it is directly.preceded by an initial lightning, and the ball originates at the place struck or a small distance from it. The preliminary lightning may be absent in more than a few cases.
7. The lightning ball disappears quietly, or with a mild bang, or with a terrific explosion in which short linear flashes shoot out in great number on all sides. Sometimes it ends when a linear lightning discharge strikes the ball.
8. The speed of ball lightning which appears from the bottom of clouds and falls down to earth is considerable (conversion to linear lightning). Near the ground or in enclosed rooms it moves at about 2 m/sec. The globes can remain entirely motionless at times; the attached ones especially can be stationary arid then disappear, boiling and spraying out sparks (conversion to St. Elmo's fire). Occasionally motion caused by the wind is noted, but the path is most often unaffected by wind.
9. Sometimes several lightning balls appear around the place struck by a linear discharge. A single large ball can burst and several small ones shoot out. In rare cases two fireballs occur one over the other, connected by a chain of small luminous beads, or a short beaded chain appears with a single lightning ball (transformation to true bead lightning).
10. The free floating and attached ball lightning seem to behave entirely differently, but they can change into one another. The floating type gives the impression of very high-voltage discharges of low current, comparable to Tesla discharges. The attached ball lightning seems to be of lower voltage but greater current.
11. The floating balls have the red color of the light given by meteorites in nitrogen. They avoid good conductors and usually select a path in air. They appear to be drawn into enclosed spaces from the air, entering through an open window or door or even a small crack but especially favoring the better conducting combustion gas of the chimney, so that they very often come into the kitchen from the fireplace. After repeatedly circling the room a lightning ball may leave again, often by the same path, sometimes by a new one. Ball lightning is harmless even when it falls in a group of people since it keeps its distance from human bodies as from good conductors. Sometimes it makes two or three vertical movements of several centimeters or even meters which when combined with translational motion appears like jumping. Often the path is a single descent from the cloud to a few meters from the ground followed by a rise.
12. The attached lightning balls are blindingly bright, either white or blue. They remain on good conductors, especially right on the highest point or roll along such objects (e.g., raingutters). They heat up the substances they touch, including the human bodies, on which severe burns may be inflicted when contacted, sometimes in passing under the ciothing, often with fatal effect.
13. The change of a floating ball lightning to an attached one occurs after a short pause when the ball suddenly darts to a nearby conductor, particularly water. On contact with the conductor it may disappear quietly, with an explosion, or remain as a stationary ball lightning. Those falling from clouds usually continue until they hit the ground and then explode.
14. The conversion of an attached ball into a free-floating one takes place simply by its rising, usually followed by a sioping flight to the clouds, but such a ball disappears soon after, as a rule.

Brand described in this way the widely different types of behavior reported in observations and provided one of the most complete and authoritative short summaries of the observed characteristics. The need for more systematic data on the properties in question led to consideration of questionnaires, several of which were proposed and published in attempts to guide future observers.

References

[1] Altschuler, M.D., L.C. House and E. Hildner, "Is Ball Lightning a Nuclear Phenomenon?" Nature. 228, 1970, p. 345.
[2] Barry, J.D.. Ball Lightning and Bead Lightning. New York: Plenum Press, 1980.
[3] Chen, F.F.. Introduction to Plasma Physics and Controlled Fusion. New York: Plenum Press, 1985.
[4] Dauvillier, A., "Foudre globulaire et reactions thermonucleaires," C.R. Hebd. Seances Acad. Su., 260, 1965, p. 1707.
[5] Dauvillier, A. "Sur le mechanisme de la foudre globulaire," Rev. Gen. Elect., 79, 1970, p. 433.
[6] Dijkjuis, G.C., "Thermonuclear Energy from Ball Lightning," Proceedings of the Intersociety Energy Conversion Engineering Conference, 14Th., Boston, MA, August 5-10, 1979, Vol. 2, p. 1614.
[7] Dijkhuis, G.C. "A Model for Ball Lightning," Nature, 284, March 1980, p. 150.
[8] Dmitriev, M.T., "Stability Mechanism for Ball Lightning," Sov. Phys. - Tech. Phys. (translation), 14(2), 1965, p. 284.
[9] Feynman, R.P., R.B. Leighton, and M. Sands. The Feynman Lectures on Physics, Vol. IH, Reading, MA: Addison-Wesley, 1966.
[10] Golka, R.K. "Penetrating Tesla," Proceedings of the Tesla Centennial Symposium, Colorado Springs: International Tesla Society, 1984, p. 59.
[11] Hill, E.R. and F.D. Sowby, "Radiation From Ball Lightning," Nature. 228, 1970, p. 1007.
[12] Kapitza, P.L. "A thermonuclear reactor with plasma filament fully floating in a high frequency field," Sov. Phys. JETP, 31, 1970b, p. 199.
[13] Kovac, R.J. "Ball Lightning via Computer Tesla Coil Design," Proceedings of the Tesla Centennial Symposium, Colorado Springs: International Tesla Society, 1984, p. 62.
[14] Plante, G. "Reproduction du phenomene de la foudre en boule," Ciel et Terre, 11, 1890, p. 424.
[15] Powell, J.R. and D. Finkelstein, "Ball lightning," American Scientist, 58, 1970, p. 262.
[16] Rauscher, E.A. "Properties of nonlinear coherent modes in MHD-plasmas and a possible resolution of the plasma confinement problem," Proceedings of the Tesla Centennial Symposium, Colorado Springs: International Tesla Society, 1984, p. 108.
[17] Ritchie, D.J.. Ball Lightning – A Collection of Soviet Research in English Translation. New York: Consultants Bureau, 1961.
[18] Singer, 5.. The Nature of Ball Lightning. New York: Plenum Press, 1971.
[19] Snigier, P. "Fusion energy - will experiments in ball lightning provide the key?" Electronic Design News, April 20, 1976, p. 17.

About the Author:

Dr. Jack Y. Dea has a Ph.D. in Atmospheric Physics, an MS in Physics, an MS in Electrical Engineering, and BS in Physics. He has done extensive research in cloud physics and air pollution at Desert Research Institute in Reno, and is now conducting research in solar energy and photovoltaic materials at Arizona State University.

Hydrogen Charging Vessel

(From Mike Hanson's July 20, 2001 email to Gary Vesperman, etc)

You know hydrogen is volatile and can be used as fuel, but little does anyone know that superpositive charging of hydrogen will align it to crystalline structure for a few seconds. During this period, any electrical spark will fuse the atoms of hydrogen with great speed. Speed means increased volatility. This means at least three-fold in volatility increase. Spinning a superconductor disc at 85 cps or more, and injecting hydrogen directly through a laser small hole shot through its center will produce the desired effect. See below for schematics of hydrogen charging vessel.

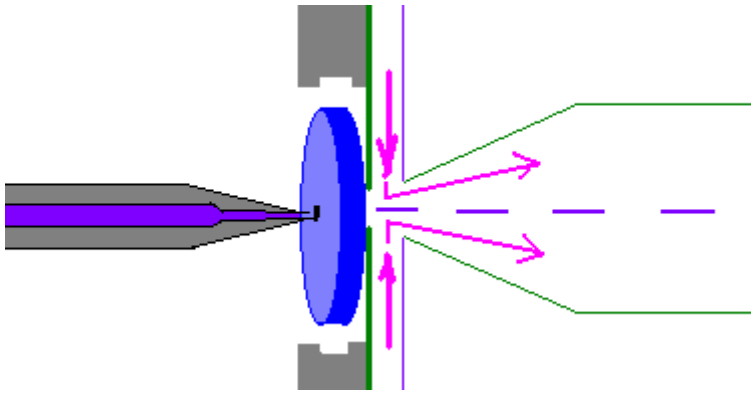

Gary Vesperman suggests experimenting with crystallized hydrogen or maybe deuterium as fuel for self-confined thermonuclear reactions.

Hawkings' Generator of Cold Electricity

Kenneth Hawkings' generator results from feeding high voltages oscillating at optimally 150,000 hertz to two 4-inch fluorescent lights. Each fluorescent tube has a strong permanent magnet attached to its center – north pole on one side, and south pole on the other side. The magnetic field between the two poles deflects the electrons in the tube off to one side. The tube is now no longer capable of generating hot electricity. Instead only *cold* electricity is extracted from the zero point energy field by the tube. The cold electricity comes out the other end of the tubes which are each wired to a brass electrode. A 6 to 8-inch white spark of cold electricity 4 inches in diameter is produced between the two brass balls.

Apparently very little power is being drawn from two car batteries. An equivalent-sized spark generated by an arc welder would require thousands of amperes and volts.

Cold electricity is not measurable with ordinary voltmeters and ammeters since it strangely has no electrons. However, cold electricity can power lamps, etc. Totally different applications could result from the observation that materials inserted in a spark of cold electricity sometimes transmute to elements of higher density.

Gary Vesperman has a video of an earlier version of the Hawkings' generator where the dazzling white spark of cold electricity is only about the size of a peanut due to a much lower frequency being used. A weird 'singing' noise heard in the video indicates that energy is being extracted from the omnipresent zero point energy field. Even Nicola Tesla himself long ago observed the same connection of singing noise to energy extraction. See below for some freeze frames of the video.

The Hawkings' generator, although fairly simple and can completely be made with commonly available components, is still in its earliest stages of development. Gary Vespermawn's friend and fellow new energy researcher Henry Curtis was the person who brought the Hawkings' generator to the Gary Vesperman's attention and provided him with a video. Curtis has been investigating and attending conferences on new energy technologies for over 15 years. Curtis thinks the Hawkings' generator is the most exciting fuel-less energy source he has ever seen. Gary Vesperman has talked with some Las Vegas engineers about building their own prototype for testing.

Frankly, 'cold electricity' is still very much a huge mystery. Gary Vesperman has a B.S. Electrical Engineering degree from University of Wisconsin-Madison and has become familiar with all sorts of weird devices. Even he has no idea as to how mathematical formulas could be written describing the most fascinating phenomenon of cold electricity. Hot fusion has received billions of research dollars with no hope of a practical electricity generator for decades to come. Surely studies and development of cold electricity and new energy devices such as the Hawkings' generator are equally deserving of massive funding by the US government, if not more so, than hot fusion.

The following report was written by Henry Curtis and Gary Vesperman in 2001.

Report by
Henry Curtis and Gary Vesperman

Gary C. Vesperman lives in a house on 588 Lake Huron Lane, Boulder City, Nevada 89005-1018; 702-435-7947; garyvesperman@yahoo.com. He worked as a technical writer with 18 computer engineering companies in Silicon Valley and with EG&G Special Projects in Las Vegas. Since 1992, he has written small initial public offering memoranda and business plans for two dozen startup companies. During that time he became involved with a network of inventors and scientific pioneers in new sources of energy. He has a BS Electrical Engineering degree from University of Wisconsin-Madison. He has compiled several reports on numerous advanced technologies (see www.padrak.com/vesperman).

Gary met Henry Curtis at the Institute of New Energy Symposium in Salt Lake City September 2000. Henry has been involved with the new energy field for approximately 15 years. Henry has investigated in person numerous new energy devices. Henry's permanent address is c/o Adv Cmp Bkkpng, 6111 North Pepper Tree Lane, Tucson, Arizona 85741. Phone is 303-596-6466. Henry's cell phone is 954-295-5407. He travels most of the time. His email address is hcurtis@mindspring.com.

Henry first met Ken Hawkings at the Keelynet conference in Dallas the weekend of June 16-17, 2001. Norm Wootan had introduced them. Not that Henry knew Norm all that well, but Henry was talking with Norm about the Gray electric motor and the prototype car that was built about 10 years ago and is now for sale for $50,000. When Henry and Ken talked about the Gray motor car Ken told Henry that he did not know where it was and that Joe Gordon had the contact information. Ken was in a hurry to go and gave Henry his cell phone number.

Henry called Ken Wednesday evening, June 20, 2001. Ken was excited about talking and had a lot to say about a variety of technical subjects. Ken is a technical person who has been in management of companies for many years. He appears to be 50 to 60 years old.

Ken lives in Dallas where he has a home and a large warehouse. He said that in the last 3 years he had spent a lot of money on free energy projects. His wife is not happy about his negative cash flow. Ken had been a corporate executive and has a technical background. He has retired three times. He is now working towards his fourth retirement.

Ken Hawkings was six months into a lucrative nine-month contract in New York City with a telecommunications company called or with the abbreviation ONI. He was working on a project involving resonance between two crystals. The objective of the contract is to build two prototype telephones so that people in separate places can talk to each other while bypassing the existing telecommunications network. An interview with the CEO of ONI Systems Corporation, if it is the same company, is shown on http://www.itradionetwork.com/scripts/martin2.html. ONI Systems Corporation is an all-optical telecommunications company which is only about 2.5 years old.

Ken spoke of building some mica capacitors and of first mining the mica in Montana. He also has a substantial interest in 300 submarine batteries that he had purchased on consignment.

Continuing their discussion on the telephone of the conference – Ken decided to loan Henry the only existing video of an experimental circuit and invited Henry to make some copies and pass them around. Ken arranged for his wife to Fedex a short video to Henry of two aetheric fire experiments with Hawkings' generator.

This device (the "Hawkings' generator" until a more generic name is agreed upon) was not publicly disclosed during the Keelynet conference. Henry thinks the device is the most exciting he has ever seen during his 15 years in the new energy field.

Henry arrived in Las Vegas Friday from Denver to attend an Eckankar conference where he met Jeane Manning, an old friend. Jeane Manning was staying in Gary's house in Henderson, Nevada. Sunday afternoon there was a lengthy meeting of Henry, Jeane, Gary, and Bob Nelson of rexresearch.com. Henry gave Jeane, Gary and Bob each a copy of the video. Henry told them some information about Hawkings' generator. Gary scheduled Henry to meet with him and John Grubb Wednesday morning July 11, 2001.

Early Wednesday morning Henry came to Gary's house to have breakfast. The video was played so that Henry could explain to Gary in detail what he knows about the generator. The video does not clearly show some of the wiring and components so the following description may not be totally accurate and complete.

In these experiments the apparatus was set up with two lead acid batteries as the power source for two automobile ignition coils. Each of these coils are energized through electronic ignition distributor pick up coils. The distributor pickup coils were triggered by a 555 timer chip's oscillating pulse. The coils were arranged to alternate their on or off cycles making a push-pull arrangement.

The high voltage output of each ignition coil is fed to a 4" fluorescent light. Each fluorescent tube has a strong permanent magnet attached to its center – north pole on one side and south pole on the other side. The aetheric fire (cold electricity) came from the other end of the tube. In the video the two tubes were connected to a small spark gap and produced a 1/4 inch or so white spark. The 555 timer maxed out at about 3100 hertz in these experiments. In a later test with a better timer chip a sweet spot, a point of apparently optimum resonance, was found at 150,000 hertz. At this frequency a 6 to 8-inch white spark 4 inches in diameter was produced.

In greater detail, two standard 12-volt car batteries are shown in the video. Each battery powers one half of the circuit. A 555 timer, essentially an old model multi-vibrator, turns on and off a switch in each half of the circuit. The timer's output is applied to both switches in such a manner as to force a pair of two ignition coils to alternately function in a push-pull mode.

Each switch connects and disconnects a magnetic pickup coil (from a car engine's distributor) to a battery on cue from the timer's signal. Each magnetic pickup powers the primary side of an ignition coil. The high voltage from each ignition coil's secondary side is applied to one end of a small fluorescent tube which is about 4 inches long and an inch in diameter. At this point, the circuit begins to act weird.

Two magnets are placed next to each tube so that the north pole of one magnet is opposite of the south pole of the other magnet, with the body of the tube mounted in between the two poles. The magnetic field between the two poles pushes the electrons in the tube off to one side. Now only cold electricity is extracted from the zero point energy field by the tube. The tube is now no longer capable of generating hot electricity. The other end of the tube is applied, through a wire, to a brass (or maybe copper?) rod. A brass ball is on the other end of the rod from the connection with the wire from the tube.

Each all-thread rod is horizontally mounted within a hole through a vertical supporting wooden block. A similar rod connected to the other tube is also horizontally mounted through a hole in another vertical supporting wooden block. The bases of these two vertical supporting blocks are attached to a horizontal wooden base. The distance between the two brass balls is adjusted by sliding the two rods through their respective holes in the two vertical wooden blocks. The rods are several inches above the base board.

The video shows a white spark between the two brass balls at about three-eighths of an inch apart with the spark one quarter inch in diameter. The spark shown has the shape of a football with its pointed ends cut off about four inches from each point. The frequency being generated by the adjustable timer at the time the amateurish video was taken was 3100 hertz, the 555 timer's maximum frequency.

The reason the video is amateurish, according to Henry, is that the device was made operational, and then it was quickly decided to grab a video camera and make a tape which lasts less than five minutes. A more professional video would show a block diagram or schematic of the circuit on a board or poster, close-ups of some key components and an explanation of their function, and then the entire circuit in operation with a thorough explanation of functions, possible theories of operation, and test results.

Henry was told that when the switching frequency produced by a different timer is at an optimum of 150,000 hertz, the white spark is approximately six inches long and four inches in diameter. Apparently very little power is being drawn from the batteries. An equivalent-sized spark generated by an arc welder would require thousands of amperes and volts.

The circuit 'sings' when in operation and is definitely audible on the videotape. It is actually a little loud, which could be a problem in some applications. When Ken first heard the weird singing noise, he recognized that the sound from his circuit is the same singing noise that Nikola Tesla has reported as singing coils and is apparently a sure sign of interaction with the zero point energy field.

One very big advantage of this circuit is that it requires only a few relatively inexpensive components. In fact, John Grubb asked if it can be so easily made with a few parts from Radio Shack, a hardware store, and an auto parts store, how can we make money with it? At the moment, there appears to be no plans to obtain any patents.

Early in 2001 Ken, Norm Wootan of Waco, Texas, and Paul Walker (?) went to Germany to sell a hydrogen generating system they wanted to develop to a company that sells hydrogen in Germany. Paul's background is in physics and submarines. On the flight over to Germany they got into a discussion and figured out the aetheric fire generating concept which was subsequently developed into the 'Hawkings' generator'. Ken remembers this as an exhilarating and exciting time – one of his life's peak experiences.

Gary met Norm at the 1996 Tesla Society convention when Norm and Joel McClain reported on their magnetic resonance amplifier.

Experimental insertions of objects in the spark, the big one generated with 150,000 hertz, so far have resulted in some peculiar materials and processes. A ceramic has been made with an extraordinarily high melting point of around 10,000 degrees. Ken, Norm, and Paul Walker (?) plan to use this ceramic for lining the reaction vessel of their new hydrogen process.

At least some types of materials become more dense the longer they are present inside the spark. There is concern that a critical mass of nuclear explosive could be accidentally created.

It is not known to Henry and Gary what the cold electricity can do. For instance, what happens when an electric motor or an incandescent light bulb loads the circuit instead of a spark gap? It is apparent to Henry and Gary that a whole new universe of applications for cold electricity may be opening up, starting with close to ground zero of no knowledge of the phenomenon.

In Ken's view there are four kinds of electricity:

AC alternating current
DC direct current
Static electricity or static charges
Aetheric fire or cold electricity

The aetheric fire is produced by working the aether at high voltages and high frequency. The higher the voltage and the higher the frequency, the more power is produced. 30,000 volts and 150,000 Hz appears to produce abundant amounts of energy, i.e., in the hundreds of thousands of watts range. At this point in time this is an estimate based on very limited qualitative observation. There is no real data.

The theory here is that the fluorescent tube acts as a spark gap capturing the aetheric energy. The magnets on either side of the fluorescent tubes deflect the electron flow so that the regular electricity does not flow through the tube. Thus the only output of the tubes is aetheric fire or cold electricity.

The net result of all of this is an over-unity power conversion gain which appears to be greater than 1000:1.

Edwin V. Gray had a company in the 1970-to-1990 era that built electric motors and advertised a soon-to-be-produced electric automobile with unlimited range. Gray was issued two patents. One patent is on the motor, and the other patent is on the diffuser tube. These are discussed at length by Peter Lindemann in his book and video. In this automobile there was a diffuser tube that Gray patented. It is believed that the function of the diffuser tube is the same as the fluorescent tube in Ken Hawkings' generator.

It needs to be established that the fluorescent tube is more efficient in the Hawkings' circuit than Gray's diffuser tube. Another tube that would be interesting to try is the tube used in the Correas' pulsed abnormal glow discharge reactor. It would be ideal for longevity, compact packaging, and sturdiness reasons to find a device which is not a tube which could be used in place of the fluorescent tube.

Henry thinks that running the aetheric fire through a step-down transformer and then rectifying it would result in an abundant source of very cheap electricity. Tests need to be done to determine the feasibility of this approach.

Ordinary hot electricity involves electrons moving along an electric field through inductors, resistors, etc. Cold electricity does not involve electrons moving around. Then just what is cold electricity? Gary has no idea. Henry doesn't know either. There is much fundamental research which needs to be done. For instance, can an ammeter measure cold current? The power of the hot DC electricity from the batteries can be easily measured.

So how can the power of the circuit's output of cold electricity be measured? What is the overall power gain of the generator? Does cold electricity comprise a hidden part of the commonly understood current flow of electrons? And when the electrons are deflected in the tubes, the cold electricity that may have always been present is now allowed to make its presence detectable in some fashion?

The morning of July 11, Henry and Gary had their meeting with John Grubb. As customary with John, he is very cautious. They talked about working with the local Las Vegas electric vehicle experts to experimentally adapt the Hawkings' generator to an existing electric vehicle and see if the car would run for a long time without recharging from Nevada Power. Gary thinks the Las Vegas chapter of the Electric Auto Association is one of the association's stronger chapters.

John, Henry, and Gary decided that the next step is for Henry to talk with Ken Hawkings and ask him what he wants to do. Henry will emphasize to Ken that there is capability in Las Vegas for incorporating the generator as an on-board battery charger for self-powered electric cars.

In the meantime, John and his wife Marge moved to Calgary where they are permanent residents. Their address is 34 Rivercrest Villas, Calgary, AB T2C 4K4. Phone is 403-255-0831; fax is 403-720-9357. Temporary email address is emueller@cadvision.com. John expects to be back in Las Vegas early August.

Henry is going to try to build his own generator in Tucson. Gary will work with Ralph Cruz and Rick Pool, Gary's friend who is an expert automotive mechanic, to build his own generator as well. Gary already has had Rick show him an ignition coil and Rick's book on car repair which has a good description of ignition coils. Ignition coils have an 87.5 turns ratio between the primary and secondary coils and can put out as much as 20,000 volts.

Henry and Gary observed that AC electricity is not good for people's health. DC electricity is much healthier. AC is used so that the voltage can be easily stepped up for long-distance transmission. With a DC generator in each house, a corresponding product line of DC-powered refrigerators, computers, TVs, etc. will need to be created. RVs already use 24V DC power. So RVs may be an excellent initial market for a 24V DC version of the Hawkings' generator.

Keep in mind that the Hawkings' generator still needs to be verified that it is capable of powering electric motors, charging batteries, and doing other wonderful things besides densifying matter placed inside the white spark.

Below are three freeze frames of the videotape. The first freeze frame is of the circuit without power. The second freeze frame of the circuit with power. The third freeze frame is a closeup of the spark of cold electricity.

4:38:39PM

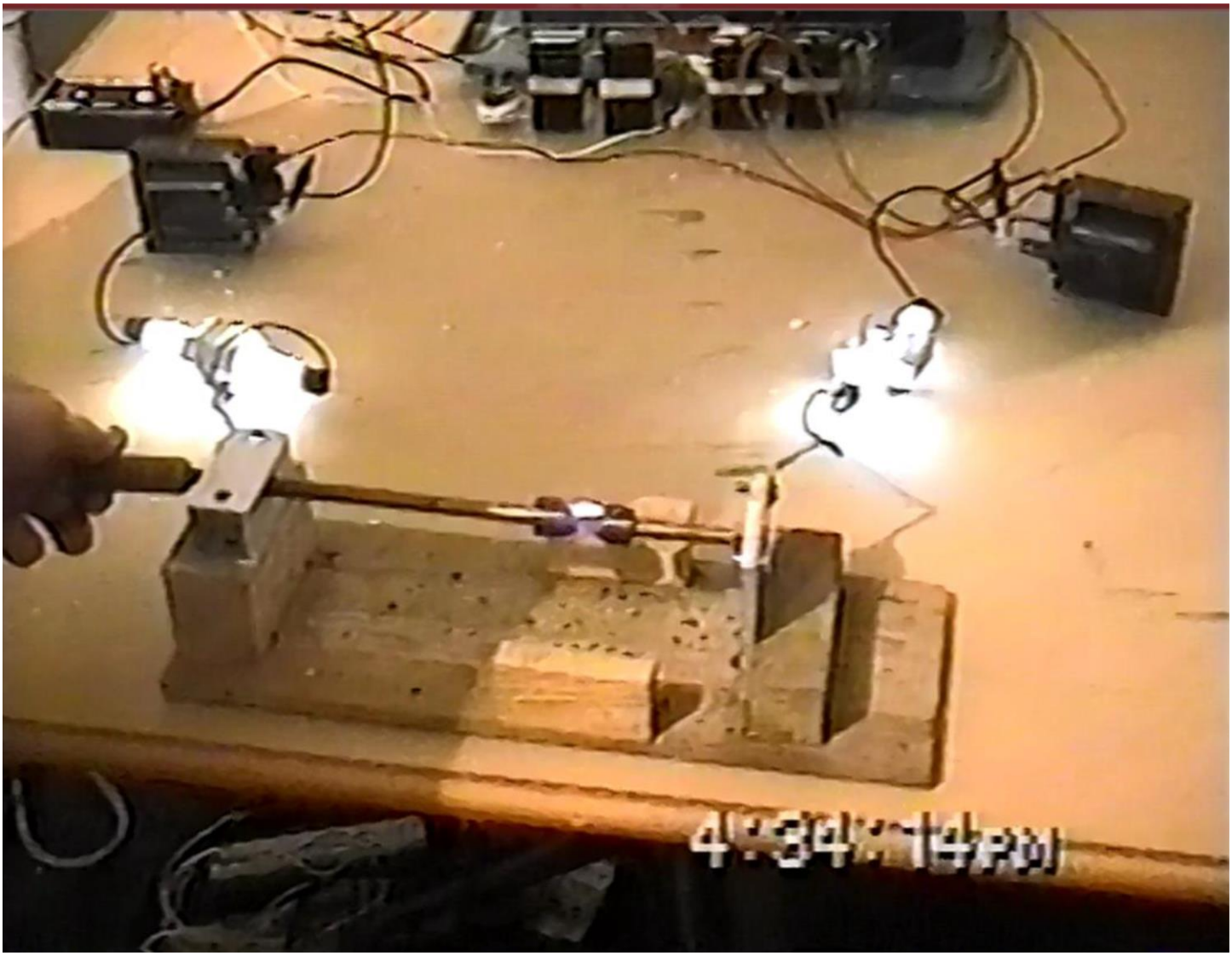
4:34:14PM

DISCLAIMER: Inclusion of any invention or technology described in this compilation of ball lightning fusion reactors and related innovations does not in any way imply its suitability for investment of any kind. All investors contemplating any investments in these devices and technologies should first consult with a licensed financial professional. Prospective investors should exhaustively perform their own investigation of pertinent facts and allegations of facts. Investors should also ensure thorough compliance with regulations of the federal Securities and Exchange Commission and appropriate state securities divisions. For more information, see http://www.zpenergy.com/modules.php?name=News&file=article&sid=1655.