Stewart Cycle Environmental Heat Engine

During the 1990's Gary Vesperman and inventor Robert Stewart were friends until Stewart's death from colon cancer sometime around 2001.

Gary Vesperman found a folder containing several papers, patent, and newspaper article reprints regarding Stewart's designs and plans for various applications for Stewart's 'Stewart Cycle environmental heat engine'. Vesperman scanned them into this collection.

For a variety of contemporary opinions as to the merits of the Stewart Cycle engine, see
http://news.google.com/newspapers?nid=1338&dat=19790824&id=4VZOAAAAIBAJ&sjid=LfkDAAAAIBAJ&pg=6971,2829097
which is an article that appeared in the August 24, 1979 Spokane Daily Chronicle. Some of the article's claims were later refuted in
http://news.google.com/newspapers?nid=1338&dat=19791006&id=F6QSAAAAIBAJ&sjid=LvkDAAAAIBAJ&pg=6074,2002800
For a more optimistic appraisal see http://www.himacresearch.com/books/crisis3.html

Gary Vesperman
588 Lake Huron Lane
Boulder City, NV 89005-1018
702-435-7947
garyvesperman@yahoo.com
www.padrak.com/vesperman
www.commutefaster.com/vesperman.html

TABLE OF CONTENTS

Robert Stewart's 1994 Fax to Gary Vesperman

Mr. Gary Vesperman
March 16-1994

Dear Gary,

Relative to our conversation concerning the possibility of introducing a suitable new vchicle design: so far as low or nonpolluting propulsion systems go that will have an acceptable range and provide adequate healing, cooling and maintain all of the accouterments the public has become aecustomcd to, including an acceptable rate of acceleration, it is my belief that a well designed hybrid could very quickly garner a very substantial markct position.

1 am not suggesting using an internal combustion engine as a prime mover, but an efficient vapor engine. The front wheels can be driven by a suitable low or non-polluting prime mover, and the rear wheels can be driven by an elcctric motor or motors that can function as either a motor or generator. The Stewart Cycle Engine will be an ideal prime mover for such a vehicle. I believe you are aware of thc effort and money that has been expended in preparing the Stewart Cycle Engine ready for the market place. At present I hold a nurnber of patents and possess volumes of proprietary information that have not yet been discloscd.

Bob Stewart

Coeur d'Alene Press May 3, 1979 – Stewart's Athol Plant

The Coeur d'Alene Press, Coeur d'Alene. Idaho Thursday, May 3, 1979 20 cents

New energy system made locally
Patented idea may revolutionize industry
New energy system nearing production

By Roderick Everhart
Press Correspondent

ATHOL – A new energy system – 30 years in the works – that could "revolutionize the energy industry" will be ready for production in Athol this summer, said David Holker, president of Stewart Waterlift Systems of Idaho, durmg a recent Interview.

Stewart Waterlift is the marketer of the Stewart Energy System, which was developed by Spokane inventor Robert Stewart.

"We can replace any combustion engine in the world," said Holker. "It is also more efficient than any other energy system now in production."

The official United States Patent describes the system as a power generating device that transforms the energy of vapor under pressure from a volatile liquid into useful rotational power that may be used in a stationary location or to propel a vehicle."

Already patented in 40 countries, the system will operate on solar energy in the daytime and, depending on the design of the boiler, on any source, such as oil, coal, wood, straw or sawdust, when the sun is not shining.

The system is charged with a working fluid such as Freon 22 or carbon dioxide. Water or antifreeze can be used to transport heat from the solar collectors to a vapor generator during sunny days.

On cloudy days or at night, valves to the solar heat collectors are closed and the heat transfer fluid is circulated through the boiler, delivering the necessary heat to the vapor generator to produce the high pressure vapor needed to drive the engine.

More simply, the engine is said to operate similarly to a refrigeration compressor.

Complete home energy source

Although the first systems manufactured will be for irrigation purposes in agriculture, a home unit, which will provide all of the energy needed tor heating, cooling, cooking, etc., is scheduled tor production later.

The only energy required by the engine which drives the generator will come from low-grade ground heat available at a level two to three feet below the frost line any place on earth.

“Our system will pay for itself in three to five years just in savings of utility bills," said Holker.

Holker estimated the cost of a home unit to be between $6-8,000 and said it has a life expectancy of 20-30 years. A mobile application of the Stewart energy cycle is in the research stage, Holker added.

Stewart Energy Systems owns 18 acres in Athol where work crews are constructing nine buildings for assembly of the energy systems. In addition, two office buildings housing draftsmen, engineers and company executives are being constructed.

Holker said July is the projected date for the beginning of assembly operation in Athol.

Local people to be hired

"We’re hiring as many local people as possible," said Holker, adding that over 100 people will be employed in the assembly plants. He added that the company will be looking for qualified welders, machinists and draftsmen.

Since Stewart Energy Systems is a relatively new company, it is looking for permanent headquarters. The company recently purchased the Rickel Ranch near Athol where it might build an industrial park if zoning changes are made by the County Commissioners.

Holker said when Stewart Energy Systems first came to the area, executives of the company had trouble with the old county commissioners who said they were not interested in having them. At the time, Holker added, they would not consider rezoning the land for industrial use.

But since the new commissioners were elected, Holker said the response to Stewart Energy's plans has been good. The commissioners said they were willing to rezone the ranch area, Holker added.

Idaho is not the only area, however, that has expressed an interest in having Stewart Energy Systems. Holker said the company has had an offer of free land in Missoula. Nevada is interested in having them and Australia has also expressed interest.

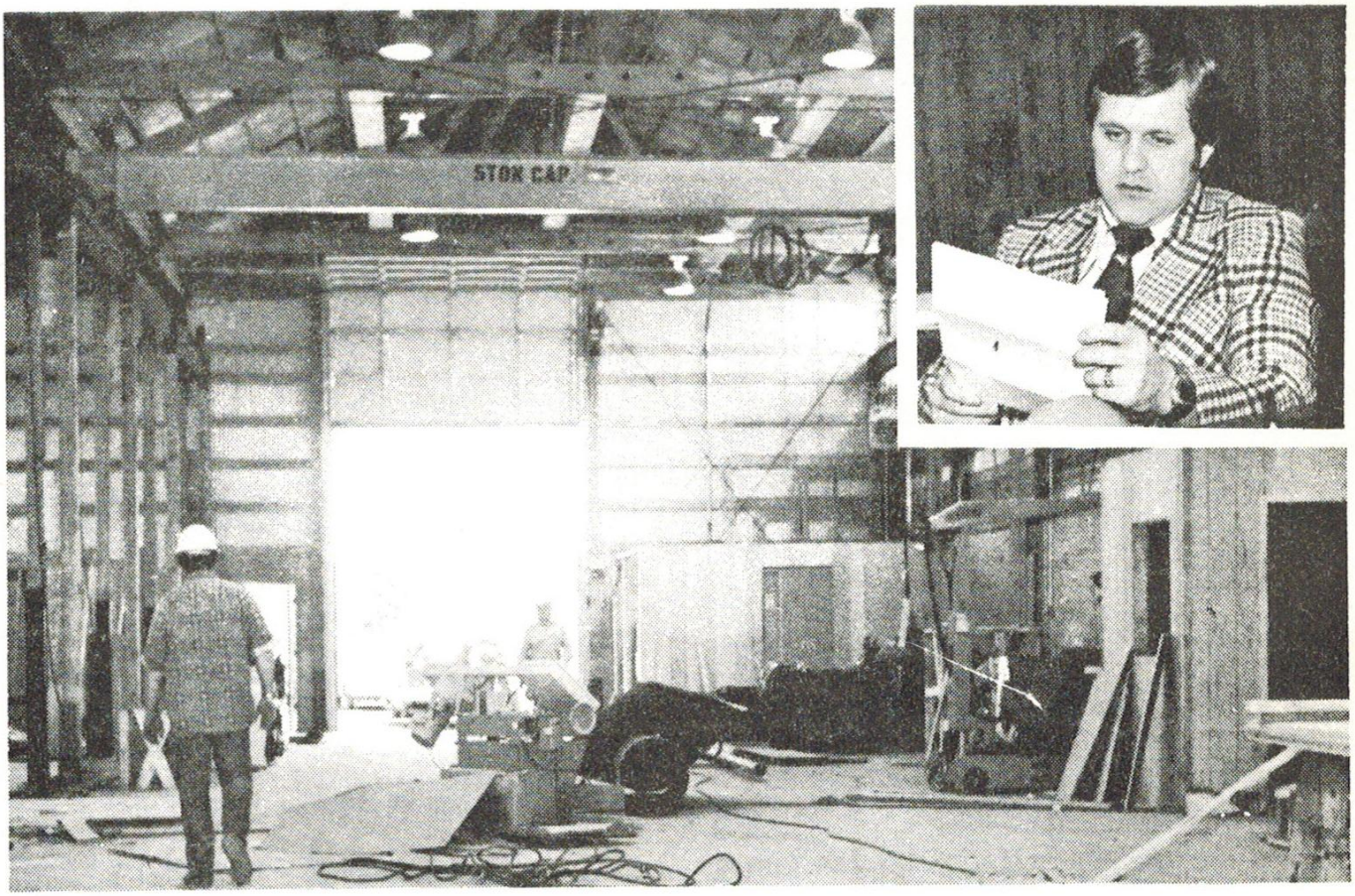

Construction on assembly building nears completion
Dave Holker, president, Stewart Waterlift Systems

"We would like to stay in this area (Idaho) but we'Il go where we can build the biggest facility," Holker said.

Holker added that even if they locate the company headquarters elsewhere, an assembly plant will remain in Athol.

As a new company, Stewart Energy Systems is highly organized. Holker said it will be broken into three separate enterprises.

The first, Stewart Energy Systems, will be responsible only for the manufacturing of the product.

Stewart Waterlift Systems, the distributor, will be divided into 11 regions throughout the United States and it will buy the energy system from the manufacturer.

Finaily, the distributor will sell in various dealers within each region.

Although Stewart Energy Systems will remain a private corporation, the distributors will become public corporations after three years of audited earnings.

Recently, after hearing about the Stewart Energy System, a 50,000-watt Illinois radio station called Holker's office on Appleway in Coeur dAlene requesting a live on-the-air interview with a company spokesman.

Following that interview, Holker said he has received over 600 letters from people who heard the broadcast and wanted to purchase one of the energy systems.

Coeur d'Alene Press Aug 21, 1979 – Stewart's Athol Plant

The Coeur d'Alene Press August 21, 1979

Stewart system nearing production
Local Inventor could have answer to energy problem

By Roderick Everhart
Press Correspondent

As the supplies of oil and other fossil fuels diminish in the world and the cost of energy increases, man is belog forced to look for alternate solutions to the world energy crisis.

Solar energy is one possible solution and likewise nuclear energy, although it invokes much controversy.

But one inventor, who lives in the Spokane/Coeur d'Alene area, has found a solution which could "revolutionize the energy industry."

According to Robert Stewart, when his invention is ready tor public marketing, lt will provide all the energy an average home will ever need and the purchaser may never again have to hook up to a public utility.

All the energy required for heating, cooking, cooling or any other electrical needs will be provided by his Stewart Cycle System. And the only energy required by the engine, which drives the generator, comes from bw-grade ground heat available at a level two to three fest below the frost line any place on earth.

Can't afford to be without one

"No home in the country can afford not to buy one," says Stewart about his invention. Every user can have his own source on his premises." According to Stewart it's 100 percent safe and pollution free.

Operating similarly to a refrigeration compressor, the engine operates on internal pressure and is sealed inside a pressure vessel. lt transforms the energy of vapor under pressure from a volatile liquid into useful rotational power that may be used in a stationary location, such as a home, or to propel a vehicle.

The life expectancy of the engine is 20 to 30 years and is designed to be much more efficient than the internal combustion engine

"It will be about as efficient as the steam engine is inefficient," Stewart said.

"As long as no foreign matter gets into the system and the ternperature is not extremely high, it will last indefinitely."

Stewart claims his invention will make not only our country less dependent on fossil fuels but also the rest of the world. Already scientists from European countries as well as the United Stetes are involved in the design of his system. Stewart said that plans are currently underway to assemble a group of international scientists in Quebec to work on the project.

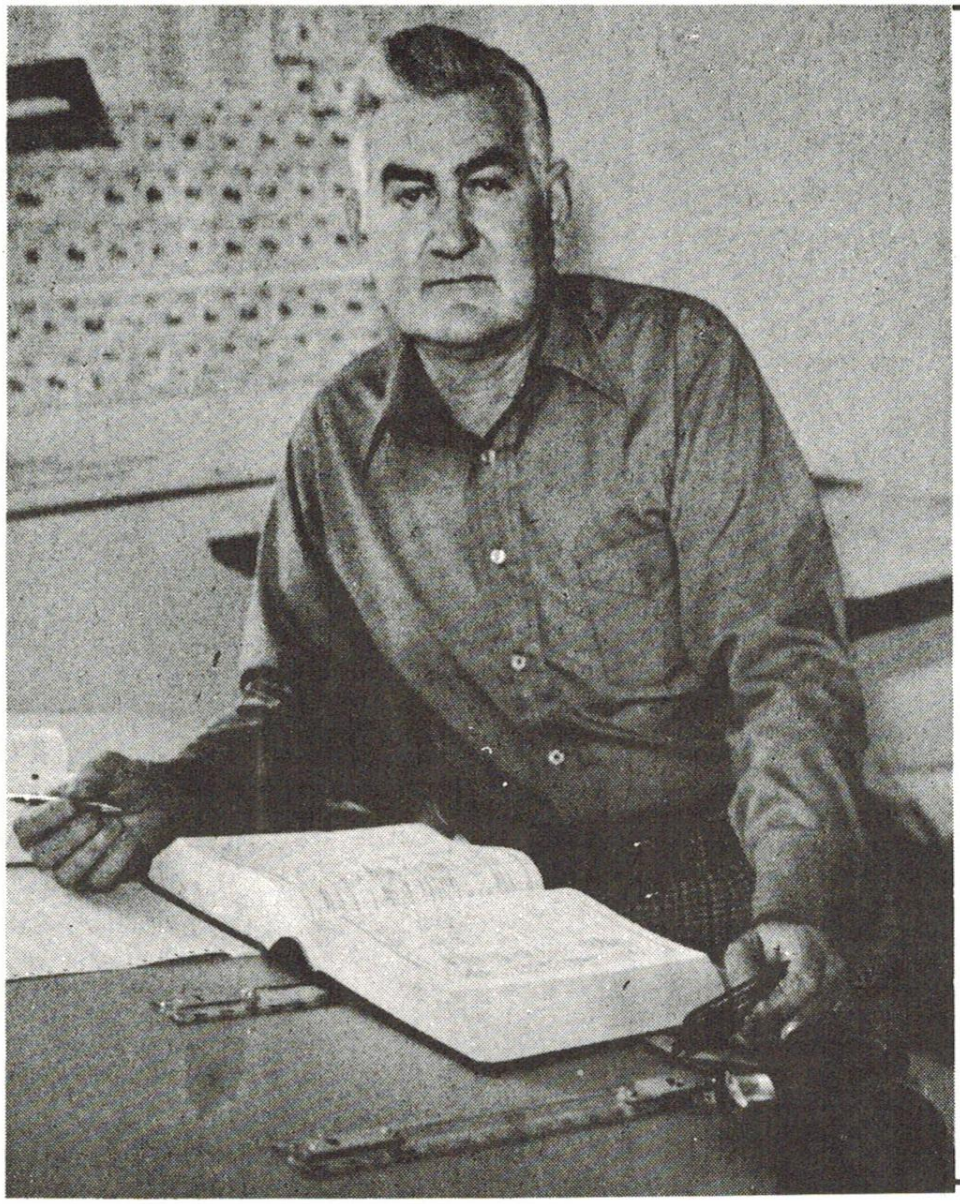

Robert Stewart inventor of Stewart Cycle System, a new concept in energy production

A life long effort

For Stewart, 57, working on his project has been nearly a lifelong effort. When he was a youngster growing up in Oklahoma, he began reading anything he could find that was related to the technology involved in creating his engine. He has studied at universities in England and Europe as well as the U. S. and for years owned his own refrigeration business.

All this time, he was working on designs for the system and in the early 1970s the first prototype engine was built.

But his project did not get the momentum it needed until he met a group of investors and backers who saw the possibility of the system. The president of the newly formed Stewart Energy Systems of Idaho, Inc., is A. LaMont Nibarger. He, along with others, provided the capital and atmosphere to start the projeet rolling.

Nibarger owns nearly 5,000 acres in Athol and Spokane, where research and development on Stewart's engine are conducted.

Designing an engine such as Stewart's is not a fast process. He must wait as much as a year and a half for some patents to be approved. Although he currently has a large number of patents on his invention, he said there will eventually be thousands. Sometimes several may be in the United States Patent Office at one time.

To protect his rights an an inventor, Stewart has been securing patents in more than 40 countries. He said a treaty, called the Brussels Accord, assures inventors of patent protection.

Government blamed for intrigue

One might assume that since his invention may have a grand impact on the energy industry, everyone would be anxious to get it on the market. According to Stewart, that is not the case.

"I've had nothing but opposition in the U.S.," Stewart said during an exclusive interview with the Press.

While living in Las Vegas, where he was a businessman for several years, Stewart was also working on designs for his invention. As early as 1962, Stewart said he had trouble with sabotage and thefts. During one incident, he rented bank boxes, in which he placed documents relating to specific patents. He claims one of the boxes was opened without his knowledge and the other completely disappeared, with the bank denying it ever existed.

In another incident, Stewart was promoting solar energy in Las Vegas and said he “got into a pretty good dispute with people in government.”

He said the Nevada Power Commission tried to openly shut down his operation and that Nixon, Mitchell and those involved in Watergate tried to keep a lid on the situation.

"At the time the Las Vegas problem occurred, I discovered a lot of wheeling and dealing going on in Washington, which involved groups in Vegas and the oil companies, and was an effort to get the oil pipeline through," Stewart said.

In 1970, an interstate shipment of air conditioning equipment belonging to him was stolen by someone whom he later found out was a directer of the Nevada Power Commission. (Stewart displayed legal transcripts from a contractor's board hearing which substantiates his claim.)

Stewart said local govenment officials purposely kept a lid on the situation, which he says is a scandal of huge proportions.

"The thing in Vegas is so corrupt it's unbelievable. It's a part of the U.S. It's clear to me that the Federal Judge down there, the U.S. Attorney and the IRS collector are running a shakedown racket," he said.

"Everything I have said can be completely substantiated," Stewart said, adding that he has documents and other proof locked safely away.

Threats and $12 million offer

To further illustrate the intrigue connected with his efforts to develop an alternate source of energy, Stewart related an incident in which he was offered $12 million to back out of the project.

DOES THE POWER LOBBY AND THE OIL COMPANIES REALLY CONTROL THE CONGRESS ?

AND , THROUGH THE CONGRESS, CONTROL SUCH AGENCIES AS THE I.R.S., F.B.I., S.E.C., THE JUSTICE DEPT., ETC. IF NOT, WHO ELSE WOULD HAVE AN INTEREST IN SUPPRESSING VALUABLE ENERGY TECHNOLOGY

IN REPLYING PLEASE QUOTE

UNITED STATES
SECURITIES AND EXCHANGE COMMISSION
REGIONAL OFFICE
3040 Federal Building
915 Second Avenue
SEATTLE, WASHINGTON 98174

June 29, 1978

REGULAR AND CERTIFIED MAIL
RETURN RECEIPT REQUESTED

Robert C. Stewart
N. 4601 Monroe Street
P. O. Box 7657
Spokane, Washington 99208

Dear Mr. Stewart:

Enclosed please find a Subpoena Duces Tecum requiring you to appear, testify and produce the documents set forth in the subpoena attachment. Also enclosed please find SEC Forms 1660 and 1662.

It is our intention to review the subpoenaed documents on the date set forth on the subpoena - your testimony or personal appearance is not required on the return date. We will continue or postpone your testimony until a later date, of which you will be notified. The subpoenaed documents may be mailed, delivered to us by you personally, or if you wish, by a third party at your direction.

As to your appearance before officers of the Commission, please be advised that the SEC Rules of Practice provide that you may be accompanied and represented by counsel at the time of your testimony.

Should you have any questions about this matter, either you or your attorney may call either Robert Gottlieb or Barbara Barnhart of this office at (206) 442-7990.

Sincerely,

Lane B. Emory
Assistant Regional
Administrator

SE-GC-8

SUBPOENA DUCES TECUM

UNITED STATES OF AMERICA
SECURITIES AND EXCHANGE COMMISSION

To Robert C. Stewart
N. 4601 Monroe St. P.O. Box 7657 Spokane, WA

At the instance of the Securities and Exchange Commission *you are hereby required to appear before* Barbara E. Barnhart, Domingo Mercado, Felice P. Congalton and other officers of the Commission. *of the Securities and Exchange Commission, at* U.S. Federal Building, office of the U.S. Attorney

in the City of Spokane, Washington *on the* 2nd *day of* August, *1978, at* 9:30 *o'clock* a *m. of that day, to testify in the Matter of* Stewart Energy Systems of Wash., Inc., et.al. S-1503 *involving* an order of investigation entered by the Commission pursuant to Section 20(a) of the Securities Act of 1933 and Section 21(a) of the Securities Exchange Act of 1934.

And you are hereby required to bring with you and produce at said time and place the following books, papers, and documents:
As set forth on schedule attached hereto

Fail not at your peril.

In testimony whereof, the seal of the Securities and Exchange Commission is affixed hereto, and the undersigned, a member of said Securities and Exchange Commission, or an officer designated by it, has hereunto set his hand at Seattle, WA *this* 29th *day of* June, *1978.*

Barbara E. Barnhart
Barbara E. Barnhart, an officer

NOTICE TO WITNESS: Unless authorized by United fee or mileage, this subpoena should accompany voucher. Witness fees and mileage authorized paid by the party at whose instance the witness appears.

DOES THIS SUBPOENA VIOLATE 4TH AMENDMENT CONSTITUTIONAL RIGHTS OF THE PEOPLE TO BE SECURE IN THEIR PERSONS, HOUSES, PAPERS, AND EFFECTS, AGAINST UNREASONABLE SEARCHES AND SEIZURES ?

ATTACHMENT TO SUBPOENA DUCES TECUM
DIRECTED TO ROBERT C. STEWART

For the years 1970 to the present, the following:

1. The names, addresses and telephone numbers of all individuals and entities who have transferred money or other consideration to you or to any trust, association, licensee, joint venture, partnership, corporation or other business combination formed by you, or on your behalf or in which you have legal or equitable interest, for the purpose of advancing or funding any and all engineering or mechanical concepts or designs conceived, developed, researched and/or promoted by you.

2. As to (1) above, the dates of all such transfers, the amounts transferred or to be transferred, and all underlying contracts, agreements, memoranda, assignments, promissory notes, receipts and any and all other written documentation of all description which evidences such transfers and/or the terms, duties and liabilities and performance attendant thereto.

3. All books and records maintained by you or at your direction or within your custody and control with respect to the receipt and disbursement of funds by Closed Vaporous Energy System Trust, Inventor's and Backers Trust, Utilization of Solar Energy Now and any and all other trusts, associations or entities in which you act as settlor or trustee or in which you have any legal or beneficial interest.

4. Assignments and/or other transfers made or effected by you of a portion of or all of any interest which you now have or may be entitled to with respect to royalties or future income to be derived from any source, including a list of the names and addresses and consideration paid by all assignees and/or transferees.

5. All documents, correspondence, memoranda, pamphlets, brochures, advertisements, news or magazine articles, contracts, agreements, billings for services, trust agreements, license agreements, joint venture or partnership agreements which relate directly or indirectly to the research, development, promotion, manufacture or advertisement of that power generating device which forms the basis of Patent No. 4,033,136 or of any other power generating device, solar energy utilization device or of any related components with which you have been directly or indirectly associated.

6. Complaints and Answers in civil litigation which have been served or filed by you or at your direction or which have been served upon you.

7. Personal tax returns, including Form W-2s and W-4s, and all accompanying schedules.

8. All financial statements or personal net worth statements prepared by you or at your direction regarding your personal financial status.

9. Cancelled checks, carbons of cashier's checks, receipts, or other evidence of transfers of funds by you, or by any trust, association, partnership or corporation in which you have any legal or beneficial relationship to Stewart Energy Systems of Washington, Inc., Stewart Energy Systems of Idaho, Inc., Friends of the Constitution, Inc., A. Lamont Nibarger, Robert Holker, Lauren Beasley, Closed Vaporous Energy System Trust, and/or Inventor's and Backers' Trust.

I RECEIVED THE ABOVE SUBPOENA DUCES TECUM FROM AGENTS OF THE S.E.C. CERTIFIED MAIL JULY 5,1978. I AM NOT AWARE OF ANY PROBLEM OR ANY SITUATION INVOLVING THE PROMOTION AND DEVELOPMENT OF THE SUBJECT PATENT PROPERTY WHICH COULD BE OF LEGITIMATE CONCERN TO THE SECURITIES AND EXCHANGE COMMISSION. I HAVE NO SECRETS AS TO THE BUSINESS ASPECTS OF THE DEVELOPMENT OF THE PATENT PROPERTY. HOWEVER, THE DEMAND IN PARAGRAPH 5 OF THE ATTACHMENT TO THE SUBPOENA BECOMES FORBODING WHEN ONE CONSIDERS THAT THERE ARE A NUMBER OF DOCUMENTS SUCH AS PATENT APPLICATIONS, TEST DATA, UNPATENTED INFORMATION LOGS OF PERFORMANCE OF PROTOTYPES, AND A COLLECTION OF OTHER SCIENTIFIC AND TECHNICAL INFORMATION THAT WOULD BE INVALUABLE TO PEOPLE WHO ARE INTERESTED IN EITHER CLOUDING THE TITLE TO OR STEALING THE PATENT PROPERTY. TWO YEARS AGO, AFTER YEARS OF HARASSMENT, I MOVED TO CANADA TO DEVELOP THE PATENT PROPERTY AND TO REDUCE IT TO PRACTICE THERE. AFTER I HAD MOVED TO CANADA, I WAS PERSUADED TO RETURN TO THE UNITED STATES AND DEVELOP THE TECHNOLOGY HERE. I MADE ARRANGEMENTS WITH BUSINESS PEOPLE IN THE U.S. TO BUILD PROTOTYPES AND CONDUCT THE TESTS NECESSARY TO MARKET PRODUCTS CONTAINING IN THIER EMBODIMENT THE PATENTED AND PATENTABLE TECHNOLOGY. ENOUGH PROGRESS HAS BEEN MADE AT THIS TIME TO ALLOW SOME FEATURES OF THE PATENT PROPERTY TO BE USED IN SOLAR ENERGY WATER LIFT SYSTEMS WHICH COULD BE MARKETED NEXT YEAR. THESE SYSTEMS CAN SAVE HUNDREDS OF MILLIONS OF BARRELS OF OIL IN THE NEXT THREE TO FIVE YEARS. SUBPOENAS SIMILAR TO THE ONE ABOVE HAVE BEEN SERVED UPON A NUMBER OF COMPANIES AND INDIVIDUALS WHO ARE ASSOCIATED WITH ME IN AN EFFORT TO ORGANIZE THE BUSINESS ENTITIES NECESSARY TO MANUFACTURE AND SELL SYSTEMS AND DEVICES UTILIZING THE PATENTED AND PATENTABLE PROPERTY TO THE CONSUMING PUBLIC. THIS IS THE THIRD TIME IN EIGHT YEARS THAT AGENCIES OF THE GOVERNMENT HAVE BEEN USED TO HARASS AND INTIMIDATE BACKERS AND ASSOCIATES. AGENCIES SUCH AS THE I.R.S. AND THE S.E.C. ARE CREATURES OF CONGRESS AND CAN HARASS JUST ABOUT ANY INDIVIDUAL WITH IMPUNITY. I HAVE GOOD AND SUFFICIENT REASON TO BELIEVE THAT A PROPER INVESTIGATION CONDUCTED BY PEOPLE WHO ARE INTERESTED IN DISCOVERING AND PUBLICLY DISCLOSING THE FACTS WILL REVEAL THAT THESE SUBPOENAS ARE JUST A PART OF A CATALOG OF ACTIVITY BY SUCH AGENCIES AS THE I.R.S.,F.B.I., S.E.C., ETC., DESIGNED TO HARASS AND INTIMIDATE BACKERS AND ASSOCIATES IN AN EFFORT TO IMPEDE THE DEVELOPMENT OF VALUABLE ENERGY TECHNOLOGY. IN THE FUTURE I WILL RESPOND TO THESE PEOPLE IN THE NEWSPAPER AND LET THE PUBLIC SEE JUST WHAT THE SITUATION IS.

PLEASE WRITE TO SENATOR JACKSON, SENATOR MAGNISON, AND CONGRESSMAN FOLEY AND ASK THEM TO LOOK INTO THE MATTER.

THEIR ADDRESSES ARE:

THE HONORABLE HENRY M. JACKSON
ROOM 137, SENATE OFFICE BUILDING
WASHINGTON, D.C. 20510

THE HONORABLE WARREN G. MAGNISON
U.S. SENATE
WASHINGTON, D.C. 20510

THE HONORABLE THOMAS S. FOLEY
HOUSE OF REPRESENTATIVES
WASHINGTON, D.C. 20515

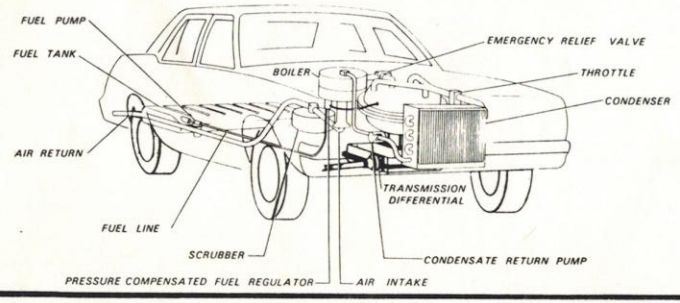

AN EXAMPLE OF ENERGY TECHNOLOGY THAT IS BEING SUPPRESSED

THE AUTOMOBILE IN THE ILLUSTRATION IS FITTED WITH A STEWART CYCLE ENGINE. ENGINE POWER PLANTS OF THE EXTERNAL HEAT TYPE CAN OPERATE VIRTUALLY POLUTION FREE. THESE ENGINES CAN BE DESIGNED TO RUN ON A FRACTION OF THE FUEL REQUIRED BY INTERNAL COMBUSTION ENGINES WHICH ARE USED IN MOST VEHICLES TODAY. STARTUP TIME EVEN IN COLDEST WEATHER SHOULD BE LESS THAN ONE MINUTE AND ACCELERATION CAN EQUAL OR SURPASS ANY VEHICLE IN EXISTENCE AT THIS TIME.

ROBERT C. STEWART, INVENTOR, P.O. BOX 7657, SPOKANE, WA. 99208

In 1974, he said he had dinner with a person representing himself as a lawyer from Beverly Hills. Betore the evening was over, he had painted a picture of how Stewart could end up with $12 million cash at the end of two years. All he had to do was execute a Lloyds of London bond and hang up the project.

Stewart refused the offer.

The situation in Las Vegas forced him underground for a few months. Threats indicated he would be "torpedoed" if he stayed. So he left for Canada with a friend who owned land there. Later, he returned to Salt Lake City where he met Lamont Nibarger.

Despite all the harassment and threats, Stewart is committed to marketing his product, even if it means taking it to another country. Australla, China and several European countries are interested in having Stewart Energy Systems locate there.

Stewart said China has offered to furnish all the labor and then let Stewart Energy Systems take the product out of the country and sell it wherever they want.

Nevertheless, the research and development facilities for the project will most likely remain in the Spokane and Athol areas.

lf progress continues and the system in marketed, the day may come when nearly every new home or business will offer a Stewart engine to provide all its energy needs.

But rest assured, it's not the hope of OPEC or any major national oil company.

Gem State Miner Sept 6, 1979 – Stewart's Athol Plant

The Gem State Miner, Oldtown, Idaho Thursday September 6. 1979

The Orgone connection
Athol City officials skeptical about the revolutionary Stewart energy project

By Minnie M. Horsmann

ATHOL – The Energy Systems International plant at Athol, a division of Stewart Energy Systems, discourages visitors with a huge "Restricted Area – Employees Only" sign at the entrance.

But, according to Vern Belcher, division manager of engineering, who recently transferred to the plant from the research department in Spokane, the sign is merely to slow the constant flow of visitors during the mid-construction period.

Visitors are also asked to sign a non-disclosure form before touring the plant.

Shipment of the first turbine-engines to be used in irrigation systems is scheduled for next spring rather than mid-summer of this year as originally planned when the 18 acres within the city limits were purchased last fall and construction started.

The ESI multi-fuel engine is an alternative, according to company brochures, mankind's dependence on diminishing oil reserves. The Organic Rankine Cycle (ORC) engine is designed to convert any kind of heat energy to rotary power, which can then be used for electrical generation, or pumping application.

The ORC engine is operated by a mysterious, volatile working fluid, 'Orgone', a trade name whose ingredients are classified according to ESI. The Orgone is heated to a high-pressure vapor which is then circulated through the turbine motor, developing rotary power.

Proponents say the engine has many advantages over conventional systems, no small part of which is price. According to Belcher, the 250-horsepower turbine motor operates at $3.80 per hour whereas a similar diesel engine runs at around $12 per hour.

The ORC engine can operate on anything burnable: solar power, ground heat, geo-thermal heat, coal, wood chips, compacted hay, sawdust, weeds – you name it.

August 15 was set as the moving day for the management and engineering offices from temporary headquarters in three trailers located on the back of the lot to the 40 by 170 foot office building near to the complex. This two-story building will house eight engineering offices and a library with a large draftsman area in one wing, and management, operations and personnel in the other. The basement will house purchasing, materials, and controls offices. The trailers will become guest quarters for consulting engineers.

Three bays of a pressure vessel shop and a machine and tooling shop are built, with several large machines already awaiting installation.

Future construction plans include a shipping and receiving building on a railroad spur, a 40 by 125 ft. addition to a 200-feet square assembly building, and a 200 ft. by 700 ft. manufacturing building.

Plans now call for farming out component production to various shops in the area; the parts will then be assembled and shipped at the Athol plant, although somewhere down the road most of the actual manufacturing will be done at the Athol plant.

A. L. Nibarger, Coeur d'Alene, is President of Stewart Energy Systems, Vic Fisher, Spokane, is General Manager, and Al Mitchell of Spokane but soon of Athol, is division manager of engineering.

R.C. Stewart, of Richel Ranch near Athol invented the Stewart engine some 30 years ago.

Stewart and the company spokesman feel the operation has been the victim of government 'harassment'. An interstate theft in Nevada went uninvestigated by authorities, Belcher noted, and the company has been called for numerous audits by state and federal agencies.

However, attorneys for the federal Securities and Exchange Commission, involved in a year-old probe, have alleged in public court documents that Stewart's manufacturing plans may involve securities irregularities or possible violations of SEC regulations.

No charges against the company have been filed by the federal investigators, although the State of Washington issued to a cease-and-desist order against the company last year.

According to Belcher "Oil companies run the country." and he feels the utilities and power companies in general are opposed to ESI's development of alternative power sources.

Belcher said 11 local construction workers (not 40 as reported elsewhere) were laid off this July, and probably would not be needed until further construction starts next spring. Some 30 employees, mostly engineers and technical workers, are now employed.

Anyway it's all a far cry from the 3,000 employee goal mentioned as an estimate when the plant goes into full production three years from now.

Local feeling in Athol runs to a sort of 'wait and see' attitude.

"They're not producing anything yet" Mayor Joreen Bohn said. "A director came to a council meeting early this spring, and said he'd come back to show us a master plan. He didn't."

Jim Peck, chairman of the Athol Planning and Zoning Commision, said the layoff of men this summer was different from the several hundred men supposed to be employed this fall.

Peck also wonders what would happen if the ESI company sells a lot of franchises and then is unable to produce the goods.

But Belcher, young and personable, is enthusiastic about ESI's future.

"We're really excited," he said. "We may go worldwide. And we just may beat the energy crunch."

The Stewart Cycle, as it Relates to One Version of an Environmental Heat Engine

The Stewart Cycle, as it Relates to One Version of an Environmental Heat Engine

Over the last forty plus years, several million dollars have been spent building and testing prototypes and testing working fluids and other aspects of the technology, required to put suitable hardware into the market place, containing Stewart Cycle Technology in its embodiment. Several patents have been obtained by Mr. Stewart over the years, one of which was filed in forty countries.

The aspects of the Stewart Cycle associated with the solar and environmental heat engine contemplated in the following explanation includes an engine which operates as the result of pressure acting on the inside or bottom face of the working piston as the result of high pressure vapor present in the crankcase at all times. The high pressure vapor can come from a vapor generator in communication with a source of low grade heat such as the heat in the air, water, ground, or heat being removed in an air conditioning situation etc.

The working fluid can be a fluid such as CO_2 which produces a high pressure vapor at low temperatures. One preferred embodiment of an environmental engine is illustrated under the cover marked, drawings.

As illustrated on page one of the drawings, the design is that of a four-cylinder radial engine with two sets of pistons, each set of pistons which are directly opposed to each other. In other words the two working pistons are directly opposed as well as are the compressor/extractor pistons directly opposed to each other.

lt is probably easier to understand how the working pistons do work, by comparing them to a conventional internal combustion or steam engine. In the case of a conventional reciprocating engine, in the conventional I-C engine the burn is initiated at or near top or outside dead center. At the beginning of the burn the pressure in the cylinder is very high. As the piston moves toward bottom or inside dead center due to the volume change the pressure and the piston's ability to do work diminishes accordingiy.

In the case of the piston type steam engine, high pressure steam is admitted to the cylinder when the piston is at top or outside dead center, as in the I-C engine, the pressure is greatest when the position of the throw on the crankshaft is at its least favorable angle to produce torque and the pressure is being transferred to the main bearings instead of producing torque at the output shaft.

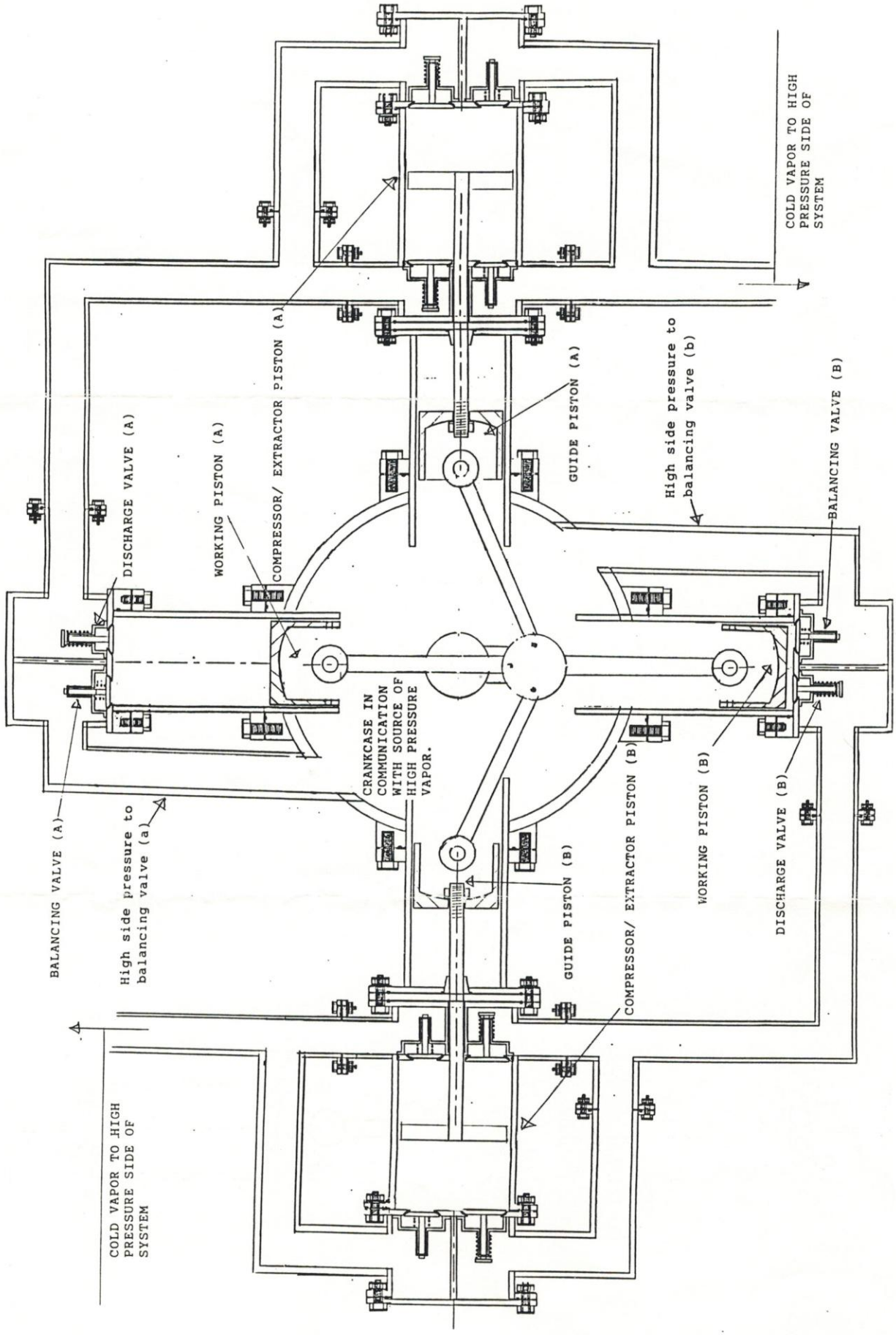
COLD VAPOR TO HIGH PRESSURE SIDE OF SYSTEM
COMPRESSOR/ EXTRACTOR PISTON (A)
GUIDE PISTON (A)
High side pressure to balancing valve (b)
BALANCING VALVE (B)
DISCHARGE VALVE (A)
WORKING PISTON (A)
CRANKCASE IN COMMUNICATION WITH SOURCE OF HIGH PRESSURE VAPOR.
COMPRESSOR/ EXTRACTOR PISTON (B)
WORKING PISTON (B)
DISCHARGE VALVE (B)
BALANCING VALVE (A)
High side pressure to balancing valve (a)
GUIDE PISTON (B)
COLD VAPOR TO HIGH PRESSURE SIDE OF SYSTEM

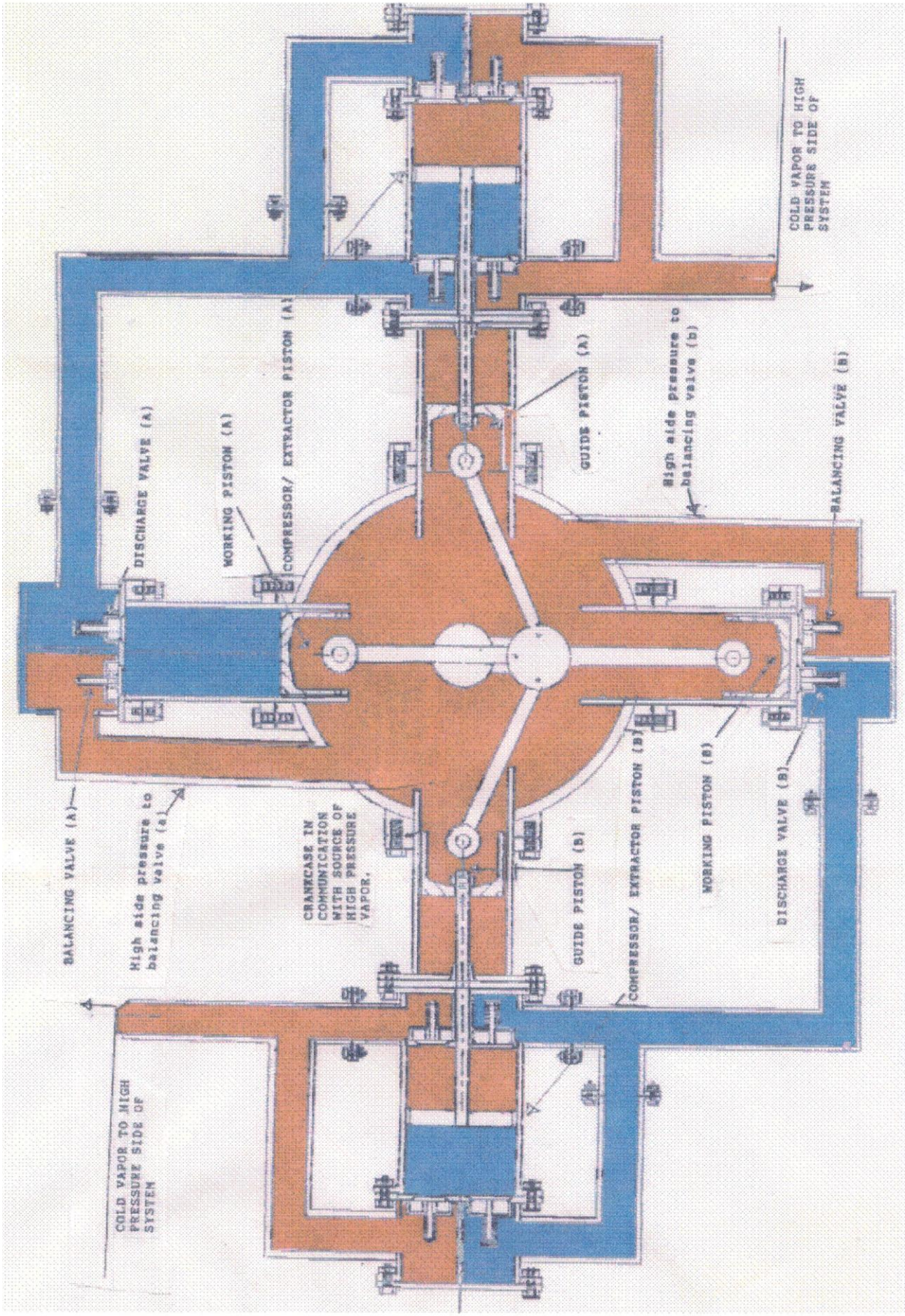
COLD VAPOR TO HIGH PRESSURE SIDE OF SYSTEM
COMPRESSOR/ EXTRACTOR PISTON (A)
WORKING PISTON (A)
DISCHARGE VALVE (A)
GUIDE PISTON (A)
High side pressure to balancing valve (b)
BALANCING VALVE (B)
BALANCING VALVE (A)
High side pressure to balancing valve (a)
CRANKCASE IN COMMUNICATION WITH SOURCE OF HIGH PRESSURE VAPOR.
GUIDE PISTON (B)
COMPRESSOR/ EXTRACTOR PISTON (B)
WORKING PISTON (B)
DISCHARGE VALVE (B)
COLD VAPOR TO HIGH PRESSURE SIDE OF SYSTEM

In the Stewart Cycle as it applies to the present description, the crankcase is a high-pressure vessel and the pressure to drive the crankshaft comes fram the force acting on the bottom or inside face of the piston when the pressure drops abruptly in the cylinder, when the discharge valve opens, which puts the top part of the cylinder in communication with the cold low pressure side of the system.

When piston (A) begins the working part of its stroke at bottom or inside dead center as the result of the pressure drop that occurred when discharge valve (a) opened, the balancing valve (b) for piston (B) which cammunicates with the high pressure side of the system will open and permit the pressure to equalize on bath faces of piston (B) as it moves from outside to inside dead center. This permits piston (A) to pull the crankshaft throw through its most favorable torque producing leverage angle, as it moves fram inside dead center to outside dead center with full working pressure acting on it through its full travel.

Speed contral can be accomplished by controlling the amount of working fluid flowing into cylinder th rough the balancing valve as the piston is moving from outside dead center to inside dead center and permitting the opposite piston to do maximum work. In some applications it may be desirable to control the speed by varying the load in order to be able to get full advantage of the refrigerating effect of the low side working fluid when the pressure drops abruptly when the discharge valve opens.

In a properly engineered system it takes less work to produce the coollng or refrigeration effect necessary to maintain the cold law pressure sink required by the working pistons in doing their work, than the total work praduced by the system overall. We are in effect using the heat pump effect, but instead of extracting low grade heat from a cold vapor, compressing it and delivering three or more times as much high grade heat where it is needed, by doing the work of compression on the vapor, we are using a similar heat work relationship to maintain the cold low pressure sink needed by the working pistons to do the work required to drive the campressor/extractor pistons with appreciably excess torque left over to drive a generator or other load.

The operation of the Stewart Cycle engine in this applicatian is a new approach to the design and operation of a vapor engine. Some of the salient points in the design and operation of the englne are:

* 1 When the pressure drops in the cylinder and the working piston is near bottom or inside dead center, the refrigerating effect of the high pressure vapor, as it leaves the discharge valve, helps minimize the work needed to remove enough heat from the low temperature, low pressure sink to maintain the required pressure imbalance in the system.

* 2 The compressor/extractor cylinders can be larger than the working cylinders and double acting, in order to provide the refrigeration effect necessary maintain the low temperature, low pressure required to sustain the pressure difference needed to drive the working pistons.

* 3 In a properly engineered system, only a fraction of the work produced by the working pistons will be required to drive the compressor/extractar part of the system – the excess work can be used to drive a generator or external load.

* 4 The work required to compress a fluid in the gaseous state is a function of the speed of its molecules. The colder a vapor is, the slower its molecules are moving, and the least amount of pressure is being imposed on the walls of the cantainment vessel. When compression occurs there is a time lag in the speeding up of the molecules as they transfer heat to each other as they are being compressed. This permits the compressor piston to move through the part of its travel in the cylinder when the throw on the crankshaft is passing through its least favarable angle to do the work of campressian on the vapor while its pressure is still low. In the case of a cpmpressor piston traveling six inches in the cylinder, most of the work required to move the fluid to the high pressure side of the system, is done during the last inch of travel when the throw on the crankshaft is in its most favorable position to do the work of campression, while requiring the least amount of torque.

* 5 In the operation of the Stewart Cycle as it applies in this case, when the working piston is at inside dead center and the discharge valve opens, the vapor in the cylinder will suddenly expand and produce refrigeration effect as it rushes to the cold low-temperature side of the system. The more work the vapor does in expanding the less work will be required to remove the remaining heat necessary to maintain the cold low pressure condition in the sink or discharge side of the system.

* 6 Even though the condenser/compressor pistons may be larger than the working pistons and are double acting, it still takes less work to maintain the low temperature condition in the sink, than the work done by the working pistons. In a reciprocating compressor the vapor is taken into the cylinder through the suction valve and is compressed as the piston moves toward outside dead center. As mentioned above, the work required to compress the vapor in the cylinder is a function of the speed of its molecules or its temperature.

* 7 The happenings inside the compressor cylinder, is a proper subject to be discussed in a statistical thermodynamics discussion. In general, the reason we use a heat pump to save money on our home heating bill, is related to the fact that it takes less energy to compress a vapor and change low-grade heat into high-grade heat, that is suitable for comfort heating, than it does to provide the same amount of heat from direct resistance heating.

* 8 In viewing the drawing it will be seen that in this particular design, a four-cylinder radial configuration with all pistons connected to a common crankshaft throw, has been chosen to explain the operation of the Stewart Cycle System.

* 9 In the four-cylinder radial design, the two working pistons are directly opposed to each other, and the two compressor/extractor pistons are also directly opposed to each other. In this design the working pistons work through their full travel, from inside dead center to outside dead center. In this situation we have to remove enough heat from the discharged vapor to maintain the required pressure difference between the high pressure and low pressure part of the system.

* 10 The condenser/extractor pistons are double acting. That means that they compress vapor at both the top and bottom part of' their travel in the cylinder. Due to the nature of the thermodynamics associated with the compression of a fluid in the vapor state, we need to consider pressure conditions in the cylinder as the vapor is being compressed.

* 11 When the vapor is drawn into the cylinder through the suction valve its temperature and pressure are equal to that of the low pressure or refrigeration side of the system. As the compressor piston moves in the cylinder towards the end of its travel the molecules are squeezed into smaller and smaller volume imparting energy to each other and speeding up and increasing the pressure and the work needed to further compress the vapor. Please read *4 again.

The Stewart Cycle Environmental Heat Engine

The Stewart Cycle Environmental Heat Engine

To understand the heat engine in this illustration, one must first understand the operation of the Stewart Cycle Engine. In this design the cylinders are attached to the crankcase, which is in essence a pressure vessel. The crankcase is in communication with a source of high-pressure vapor. The internal pressure in the crankcase acting on the inside or bottom face of the piston is the source of the force which drives the crankshaft.

For instance, if the pressure in the crankcase is two hundred psia., and the diameter of the piston is 4” or 12.5 sq.in. of surface inside the crankcase, that means that each piston has a force of 2500 lbs. acting on its inside face. In viewing the illustration you will see that each cylinder is fitted vith two valves mounted in a vapor chamber which is mounted on the cylinder. The vapor chamber is divided into two compartments, one of which is in communication through tubing "A" with the crankcase and the other communicates with the extractor through valve "B".

As long as there is no valve action the pressure is balanced, and no movement takes place, But when the balancing valve "A" for piston "A" opens, and the discharge valve "B" for piston “B” opens, the pressure equalizes on both faces of piston "A". The pressure on the inside face of piston "B" is the same as that of the crankcase, but the pressure on the outside face of piston "B" is equal to that of the extractor which can be a small fraction of that of the crankcase.

In viewing the illustration you will see that there is a four-cylinder radial design with two power pistons and two compressor type extractor pistons connected to a common crankshaft throw. In this design speed control is accomplished through valve "C" which controls the pressure on the outer face of the pistons when pressure balancing valves "A" and "B” respectively open to permit the opposite piston to do work while moving toward outside dead center due to the pressure drop that occurs when the discharge valve opens.

lt should be noted that in this design the working piston does work through the full travel of the piston from inside dead center to outside dead center. When the most work is required to compress the vapor inside the extractor cylinders the working piston is in its most favorable position to do the most work, and the compressor/extractor piston is in the most favorable to compress the vapor and push it into the condenser.

The hardware to utilize the advantage of compressing vapor containing low-grade heat 30 to 50 degrees, and extracting three or more times as much high-grade heat 100 to 120 degrees, to be used for comfort heating than would be available from direct resistance heating, has been around for a long time – it is called a heat pump.

The bottom line here is that, due to the fact that the work required by the extractor pistons to maintain the low-pressure condition required by the working pistons, is less than the amount of power produced by the working pistons, the excess power can be used to drive a generator or other load.

In operation of the engine, when the balancing valve opens with the piston near inside dead center, the pressure in the cylinder will drop to that of the piping connecting the working piston to the extractor. The volume of the extractor cylinder can be three or more times greater than that of the working cylinder, and the extractor piston is double acting.

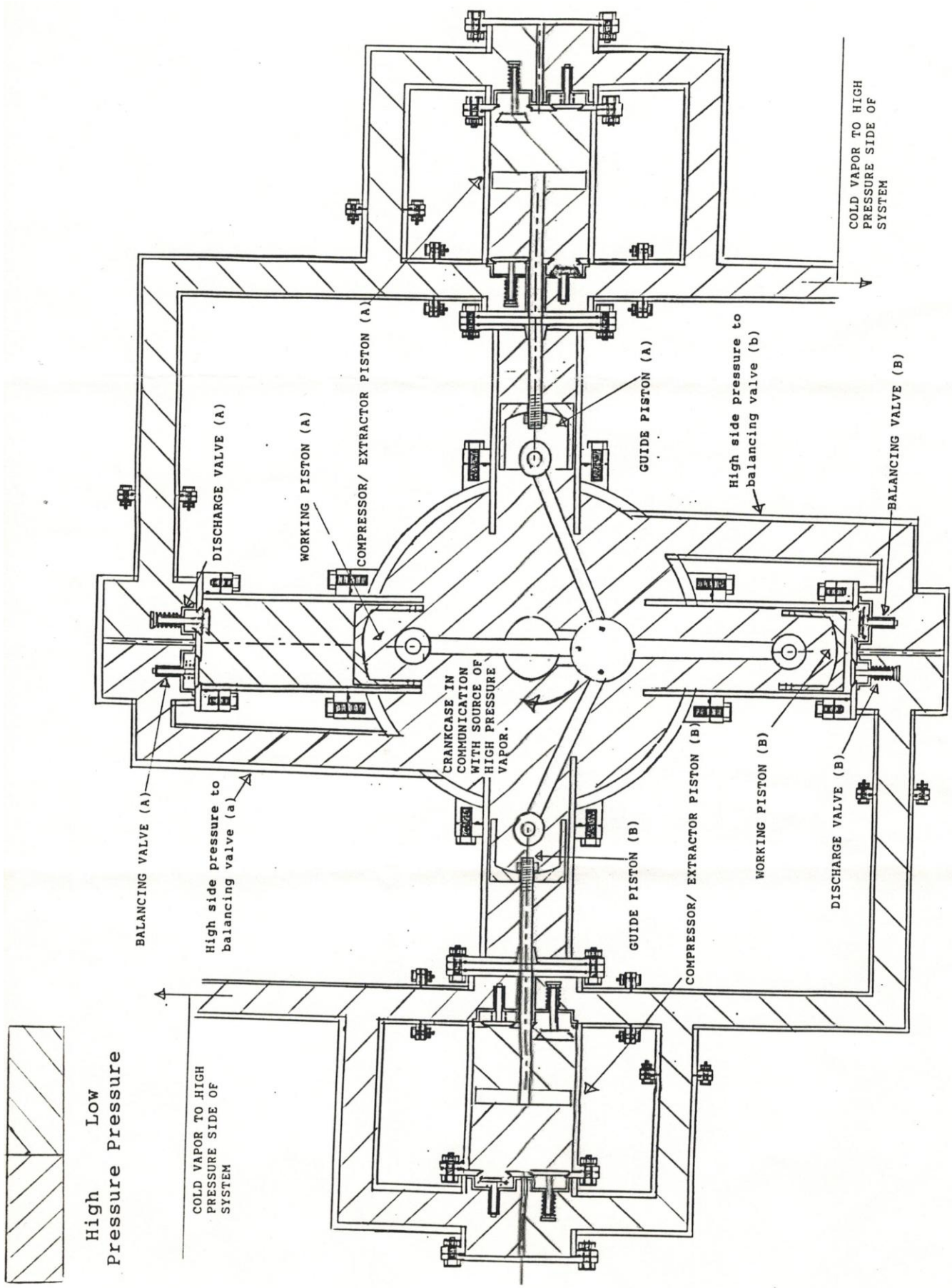
COLD VAPOR TO HIGH PRESSURE SIDE OF SYSTEM
COMPRESSOR/ EXTRACTOR PISTON (A)
WORKING PISTON (A)
DISCHARGE VALVE (A)
GUIDE PISTON (A)
High side pressure to balancing valve (b)
BALANCING VALVE (B)
CRANKCASE IN COMMUNICATION WITH SOURCE OF HIGH PRESSURE VAPOR.
BALANCING VALVE (A)
High side pressure to balancing valve (a)
GUIDE PISTON (B)
COMPRESSOR/ EXTRACTOR PISTON (B)
WORKING PISTON (B)
DISCHARGE VALVE (B)
COLD VAPOR TO HIGH PRESSURE SIDE OF SYSTEM
High Pressure
Low Pressure

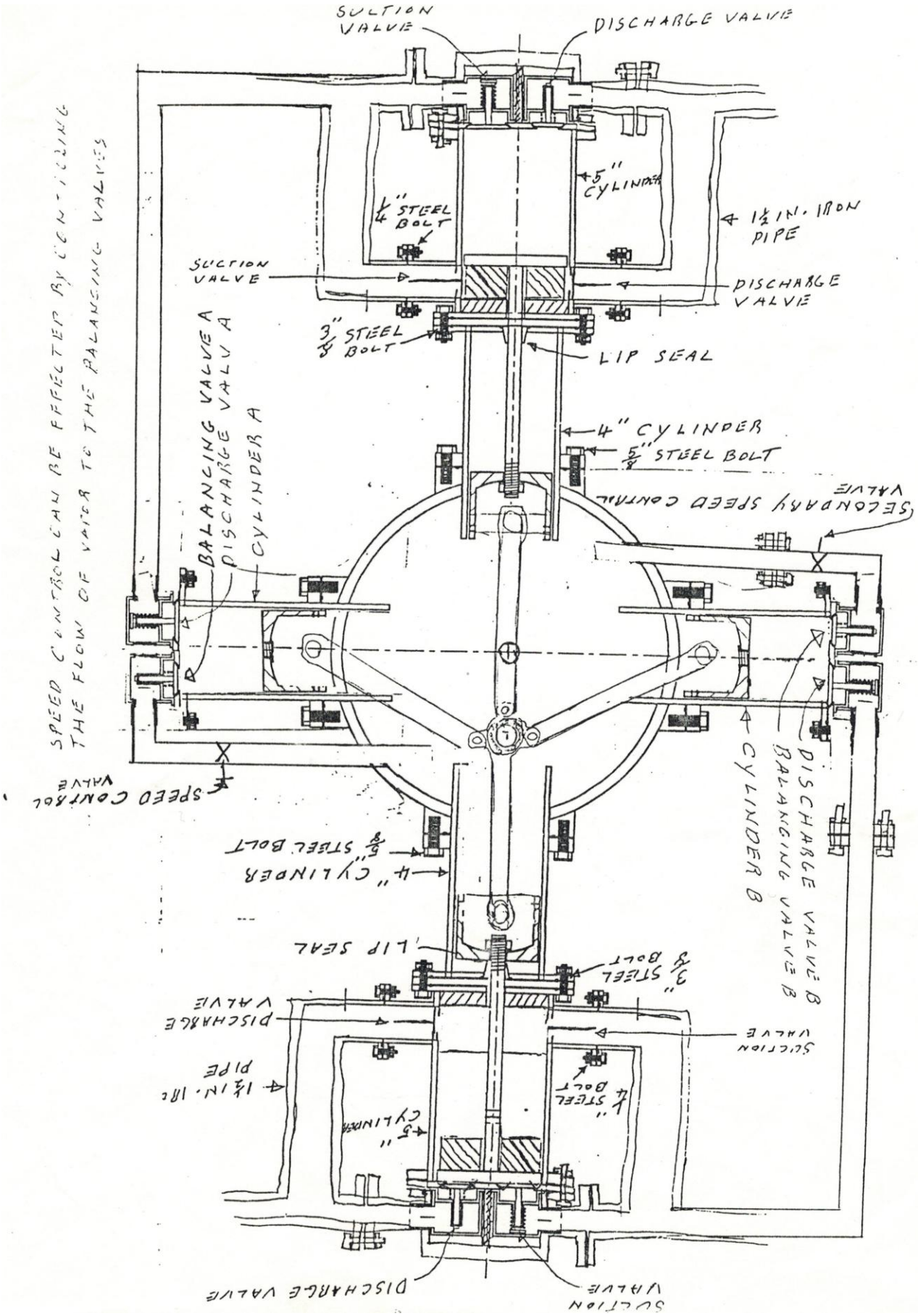
SPEED CONTROL CAN BE EFFECTED BY CONTROLLING THE FLOW OF WATER TO THE BALANCING VALVES
SPEED CONTROL VALVE
BALANCING VALVE A
DISCHARGE VALVE A
CYLINDER A
DISCHARGE VALVE B
BALANCING VALVE B
CYLINDER B
SECONDARY SPEED CONTROL VALVE
4" CYLINDER
5/8" STEEL BOLT
LIP SEAL
3/8" STEEL BOLT
SUCTION VALVE
DISCHARGE VALVE
1/4" STEEL BOLT
5" CYLINDER
1 1/2 IN. IRON PIPE
SUCTION VALVE
DISCHARGE VALVE

If we consider carbon dioxide as the working fluid, the pressure of CO_2 at 32 degrees F., the freezing temperature of water, is over 500 psia. With pressure regulators we can control the pressure by controlling the amount of liquid being admitted to the vapor generator.

For instance, if we maintain 200 psia in the vapor generator at a temperature of 50 degrees F. the volume of the vapor will increase, and the density of the vapor will decrease. In the operation of the engine, when the discharge valve opens and the pressure suddenly drops to that of the extractor, the vapor will give up some of its energy as the result of having done work and cooling down due to the refrigeration effect taking place.

When the vapor enters the extractor it will have much less energy in it than it did when it was admitted to the cylinder when the balancing valve opened to permit the opposite piston to do work. The pressure of a confined vapor is a function of the speed of its molecules as they impinge on the containment vessel. When the number of molecules is kept constant, and the volume is increased, the work done by the molecules in filling the new larger volume will cause the vapor to give up some of its energy, and its temperature and pressure will drop in proportion to the volume change, provided that the container is insulated.

When the extractor takes in the discharged vapor from the vorking piston and allows it to continue to expand and give up its energy, the work required to compress the vapor will be greatly reduced. Due to the four-cylinder radial design where all pistons are connected to a common crankshaft throw, when the cornpressor/extractor piston is approaching outside dead center where the last one inch of travel requires the most work to push the trapped high pressure vapor through the discharge valve to the condenser to become liquid, the working piston is at its most favorable position to do work.

In other words the working piston has the same force acting on it through its full travel, while the compressor/extractor piston needs the most force applied to it during the last one inch of its travel as it approaches the end of its travel where the crankshaft leverage angle is most favorable to do the compressing while requiring the least amount of torque – a piston with a 6" stroke is contemplated in the foregoing.

In viewing the illustration it is obvious that when the compressor/extractor piston requires its maximum amount of work, the crankshaft throw is passing through its most favorable angle to require the least amount of torque. While the crankshaft throw is in position to do the most work of compression with the least amount of torque relating to the compressor/extractor piston, the working piston is passing through its most favorable leverage angle to produce maximum torque.

(Signed by Robert Stewart 2/24/1994)

Independent Press-Telegram April 21, 1974 – Stewart's Solar Plan

Independent Press-Telegram, Long Beach, Calif., Sun., Apr, 21, 1974

'Solar energy's time has come'
Inventor claims way to use sun to solve electric needs

By HERB SHANNON
Aerospace Editor

Enough nonpolluting solar energy to supply all of North America's daytime electrical power needs can be coliected from 120 square miles of Mojave Desert wasteland, according to Inventor Robert Stewart, 51, of 121 12th St., Seal Beach.

After 20 years of study and two trial operations in Arizona, Stewart claims he has perfectecl the technology to do the job and is ready to build a demonstrafion plant. He is now negotiating with Nevada investors to finance a prototype of the internal pressure engine which is the heart of his proposed system.

The engine is designed to work on a refrigerant type gas in what the inventor describes as a "backward approach to the steam engine principle." He has applied for a patent on the engine.

A former general contractor on heavy construction projects in Arizona, New Mexico and Alaska, Stewart envisions a network of generating plants with evaporative towers straddling the desert 20 to the square mile. Each plant would be fed thermal energy by the refrigerant fluid circulating through a 10,000-foot pipeline enclosed in reflectors which turn to face the sun from dawn to dusk.

Each cell in the gridwork would produce 10,000 kilowatts of electrical energy. According to Stewart's calculations, 80 cells drawing on the sun's rays falling on only four square miles of the desert would equal the output of Hoover Dam.

"On 12,000 square miles we could develop all the power required by the whole country, plus Canada and Mexico," the inventor explained. "There would be no pollution, and no cost for fuel to drive the generators.

"Hydroelectric plants like Hoover Dam and Grand Coulee could be shut down during the daylight hours to conserve water, and phased in to work only at night when solar energy is unavailable. Hydroelectric power is also nonpolluting, and the energy it consumes is cost-free."

Stewart estimates that the cost of building a solar energy generating system with the same capacity as Hoover Dam would be about $150 million.

"This is relatively inexpensive," he maintained. "It's a much simpler system to build than a steam plant, which pollutes and also consumes costly fossil or nuclear fuels.

"The whole solar energy program could pay for itself in five years at the present cost of electrical power."

The catch so far has been a problem of convincing federal energy and resources agencies of the feasibility of Stewart's proposal.

"I have been in contact with the Department of the Interior for more than a year. and I have not yet had a satisfactory response to the proposal," the inventor complained. "All they tell me is that there are programs for alloting federal lands for steam plants and nuclear plants, but none for solar energy."

A smail group of Long Beach area technicians who are interested in participating in Stewart's solar energy project have banded together to help promote public interest.

Included in the organization are Leonard Meyerhofer, whose drafting firm in the Jergins Trust Bldg., 120 E. Ocean Blvd., has produced the preliminary plans; Russell Barr, artist and mechanical draftsman in Meyerhofer's office; Roland Eberhardt, engine prototype builder, 564 W. 39th Street, San Pedro, and Mickey Ryan, Western Engine Service, 955 S. Seaside Ave., Terminal Island.

Under the title "Citizens for Development and Utilization of Solar Energy Now," the group hopes to line up enough support to prod the government agencies into taking action on Stewart's request for enough desert land to establish a pilot plant.

Meanwhile, the inventor is proceding with private investors to develop the engine prototype and to complete detailed plans for the other hardware involved.

"There is no new technology required for the pipeline coilection system, the rotating reflector tubes or the evaporative cooling towers," Stewart points out. "The only part of the system which is entirely new is the internal pressure engine, which is a new approach to producing torque with vapor energy.

"But it is many times more efficient than conventional steam engines used for generating electricity, and it is capable of using solar energy sources bcause it operates efficiently at much lower temperature ranges."

Stewart said previous experiments in solar energy in Arizona proved his system would work to pump water in large quantities, but that it could not compete economically with the cheap fossil fuel energy sources then available.

"lt's a far different story today," he said. "There is more concern about pollution by nuclear and other sources, fossil fuels are becoming more expansive and sooner or later we'll run out of them. Solar energy's time has come."

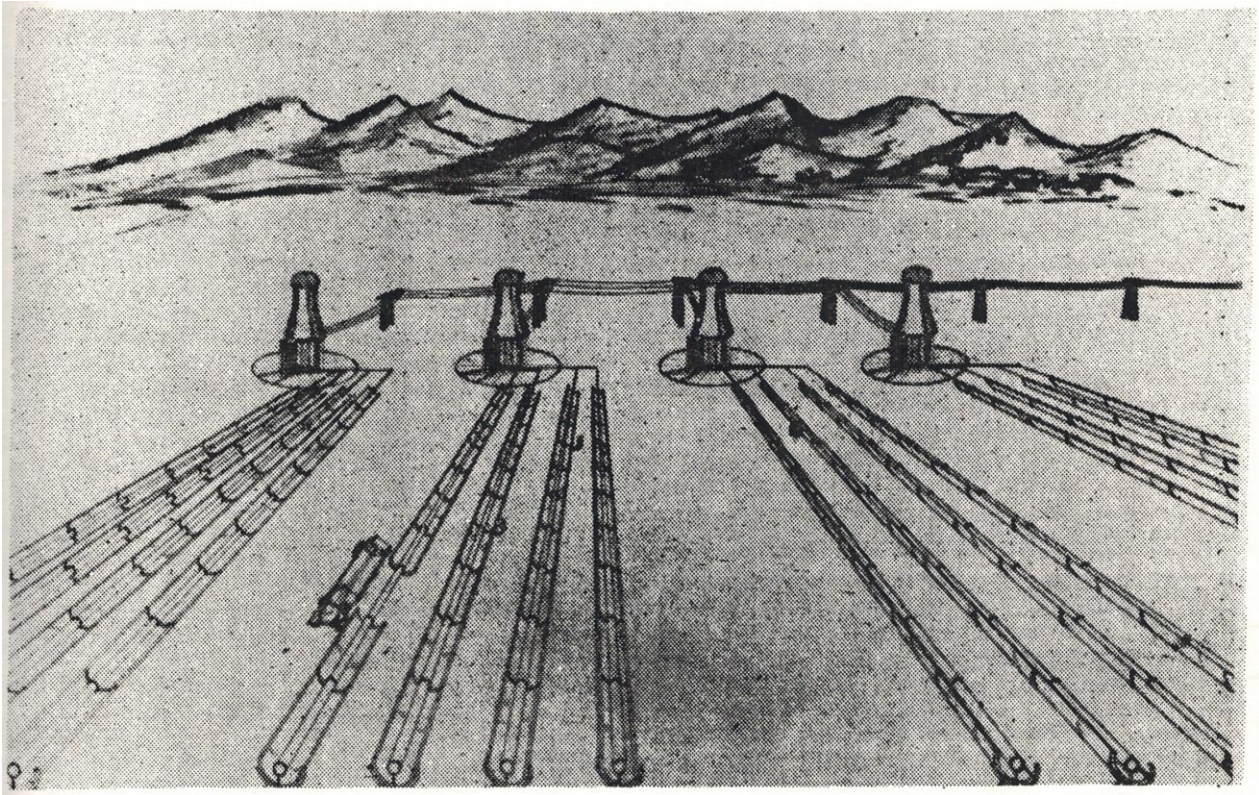

ARTIST'S RENDERING OF INVENTOR STEWART'S SOLAR GENERATING PLANT
Mile-long Solar Energy Pipelines Collect Sun's Rays to Feed Generating Cells

Stewart's Solar Farms

Monthly Newsletter of Solar Farms U.S.A., P.O. Box 1421, Scottsdale, AZ 85252-1421 July, 1992

Why solar power?

Consider, for a moment, the potential benefits of solar power over other power generating technologies currently in use in America.

Solar power offers an unlimited source of energy

Sixty-five percent of America's energy needs are currently being met by the burning of fossil fuels (oil, natural gas, and coal). The Earth's supply of fossil fuel is limited. The existing supplies will soon be exhausted.

We have seen many wars fought for control of these precious fossil fuels – there will be more such wars as energy needs grow and the supply shrinks. The intelligent way to avoid future conflicts over fossil fuel supplies is to develop alternative energy sources. As an unlimited source of energy, solar power is clearly the best choice for meeting our energy needs.

Solar power does not pollute

The burning of fossil fuels has been a major contributor to the growth of world-wide pollution of the earth's atmosphere. lt must be halted.

The use of nuclear power has produced vast amounts of deadly radioactive waste. Nations that use nuclear power are currently scrambling to find ways of disposing of the deadly nuclear waste.

Hydroelectric plants have been built on nearly every suitable site on the rivers of America. These dams have negatively impacted the rivers in many ways. The lakes behind these dams are filling with silt – thereby diminishing their storage capacity. The long term effect will be to decrease the power generating capabilities of each hydroelectric project.

Solar power is safe

Human beings make mistakes. Metal parts fail unexpectedly. Computer software produces unexpected results when a hidden ‘glitch’ appears or when exposed to a virus. We read about the effects of such accidents in our newspapers daily.

However, with nuclear power, the ever-present threat of an accident takes on a larger meaning. Millions of Americans live daily in the shadow of nuclear power plants. How long will it be before catastrophe strikes? The nuclear power industry euphemistically calls these accidents ‘events’. The word sounds harmless enough, doesn't it? An event occurred at Chernobyl or Three-Mile Island, or wherever.

Present technology makes solar power possible

An article which was published in Popular Science (May, 1990, p. 82) under the heading "The hot path to solar electricity" proves without question that we can produce all of the electricity we need with solar energy. The above article is available at your local library.

lt is now possible to fill all of America's energy needs without using fossil fuel or nuclear power. Solar power collectors can do the job. The technology exists, but there is great resistance fron the established fossil fuel and nuclear power establishments.

At this time the only thing standing between you and a Solar Farm is public awareness. Elected officials have control of the public lands and the marketing and distribution of electrical energy. lt is imperative that the people become informed about the Solar Farm program. Only you can force the politicians to deal with the Solar Farm Issue with a view toward what is best for America.

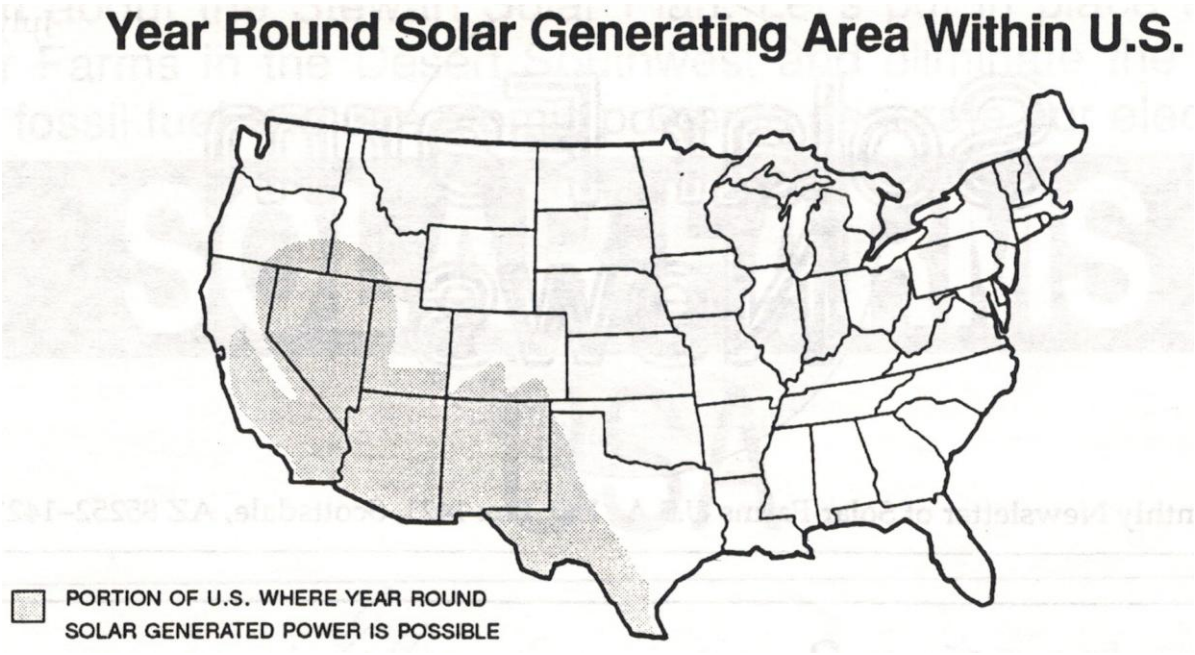

The grey area of the above map indicates that region of the United States where climactic conditions are ideal for Solar Farms. The term Solar Farm really means energy farm. Rather than harvesting crops, these farms would harvest the unlimited power of the sun! Solar power would be generated by trough type collector hardware (see illustration of 'rotating platform' below). Other solar energy technologies (photovoltaic, biomass, etc.) would also be options for appropriate sites.

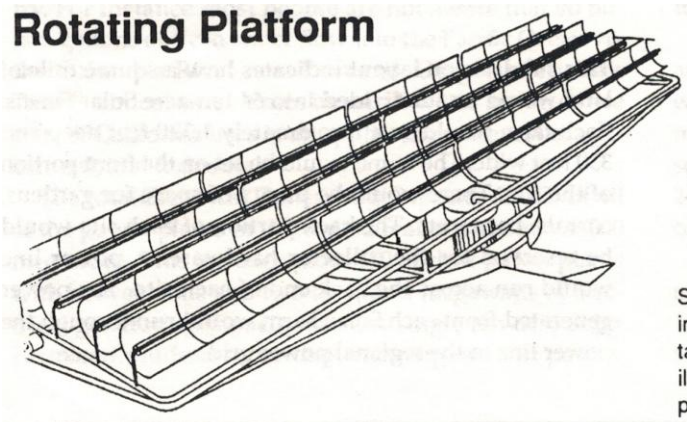

Solar Farm Sites can be located nearly anywhere. By mounting the reflectors on rotating platforms, hillsides and even mountainous terrain can be suitable for a Solar Farm. Note that this illustration is incomplete at this time due to legal considerations pertaining to the patent property.

People who are unfamiliar with the Desert Southwest might think of a desert as a wasteland – an undesirable place to live. However Phoenix, Palm Springs, Albuquerque, Las Vegas, and El Paso were all built on such lands.

There is a plan to use solar generated electricity to move large quantities of fresh water from places where fresh water is plentiful to the dry regions of the countrv. (See below for "Stewart's USA Canals Plan".) For instance most people are not aware that 90 billion gallons of fresh water flow into the Pacific Ocean via the Columbia River near Portland, Oregon every day. That is alrnost three times as much water as the entire state of California uses in all applications, domestic, agricultural, and industrial.

The total Electrical Generating Capacity (EGC) of all of the power plants in the United States is about 600,000 megawatts. This includes about 110 nuclear power plants with between one and two thousand megawatts of dcctrical generating capacity each. A single ten-acre Solar Farm can produce more than one megawatt of power. This means if we put in place 600,000 Solar Farms we could phase out the non-hydroelectric power plants and still have more EGC than we need.

In addition to solving America's energy needs, the ten-acre Solar Farm provides a means for taking pressure off the urban areas and strengthening the family unit. At present we are spending a substantial part of our income for energy that is non-renewable, very polluting, dangerous, and expensive. By relying on Solar Farms for our energy, we can avoid costly episodes like the GuIf War, the Valdez oil spill, tanker accidents, etc.

The two main reasons for installing ten-acre solar collecting hardware on ten-acre sites is to be able to efficiently utilize the waste heat, and to allow a family to have a home and earn a living on each site. Solar Farms could give 600,000 American familics a home and livelihood, and at the same time solve our energy problems.

The Solar Farms developments could be of just about any size. For example, if we put one megawatt EGC on each farm, we would produce 64 megawatts per square mile. On 16 square miles (four miles per side of the square) we would have 1,000 megawatts EGC and have 240 acres left for schools, shopping centers, parks, golf courses, etc.

We can put 600,000 Solar Farms on about 10,000 square miles of land. The State of Arizona consists of over 113,000 square miles of land; Nevada about 110,000 square miles; New Mexico over 120,000 square miles.

Substantial parts of the states of California, Texas, Colorado, and Utah would also be prime sites for Solar Farms. Clearly, 600,000 ten-acre Solar Farms located in the Desert Southwest would occupy only a small fraction of the suitable land.

The bottom line is that we can be secure so far as energy goes. We won't need to fight any more wars over oil. We would no longer be at the mercy of the Arabs, and others with foreign agendas.

We don't need to have millions of unemployed citizens when there is so much meaningful work to be done (manufacturing and installing the solar generating hardware, building homes, roads, streets, power lines, etc.) in order to make this project a reality.

You can make a DIFFERENCE!

Write to:
Solar Farms U.S.A.
PO Box l42l
Scottsdale, AZ 85252-1421

Learn about the Stewart Solar Plan. Let's put in place a million Solar Farms in the Desert Southwest and eliminate the need to burn fossil fuel and use atomic power to generate our electricity.

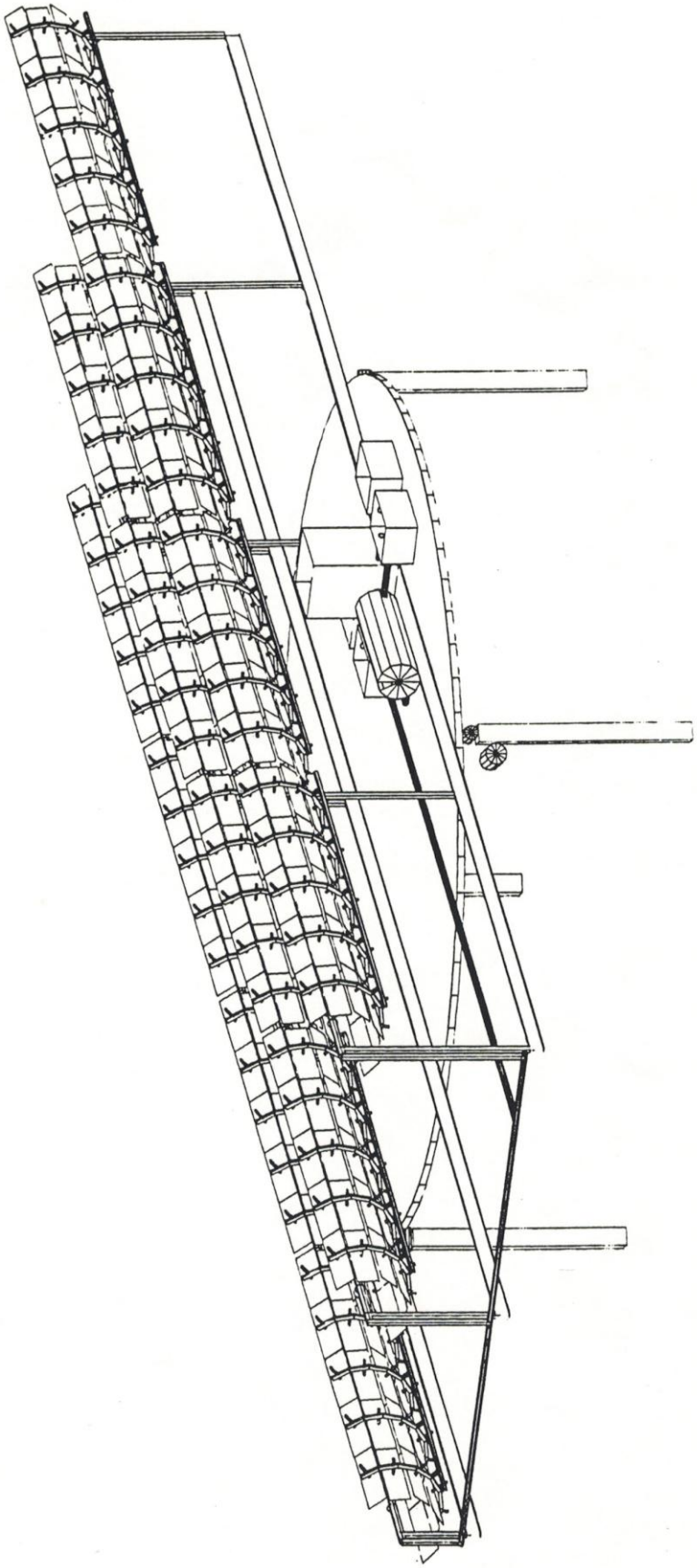

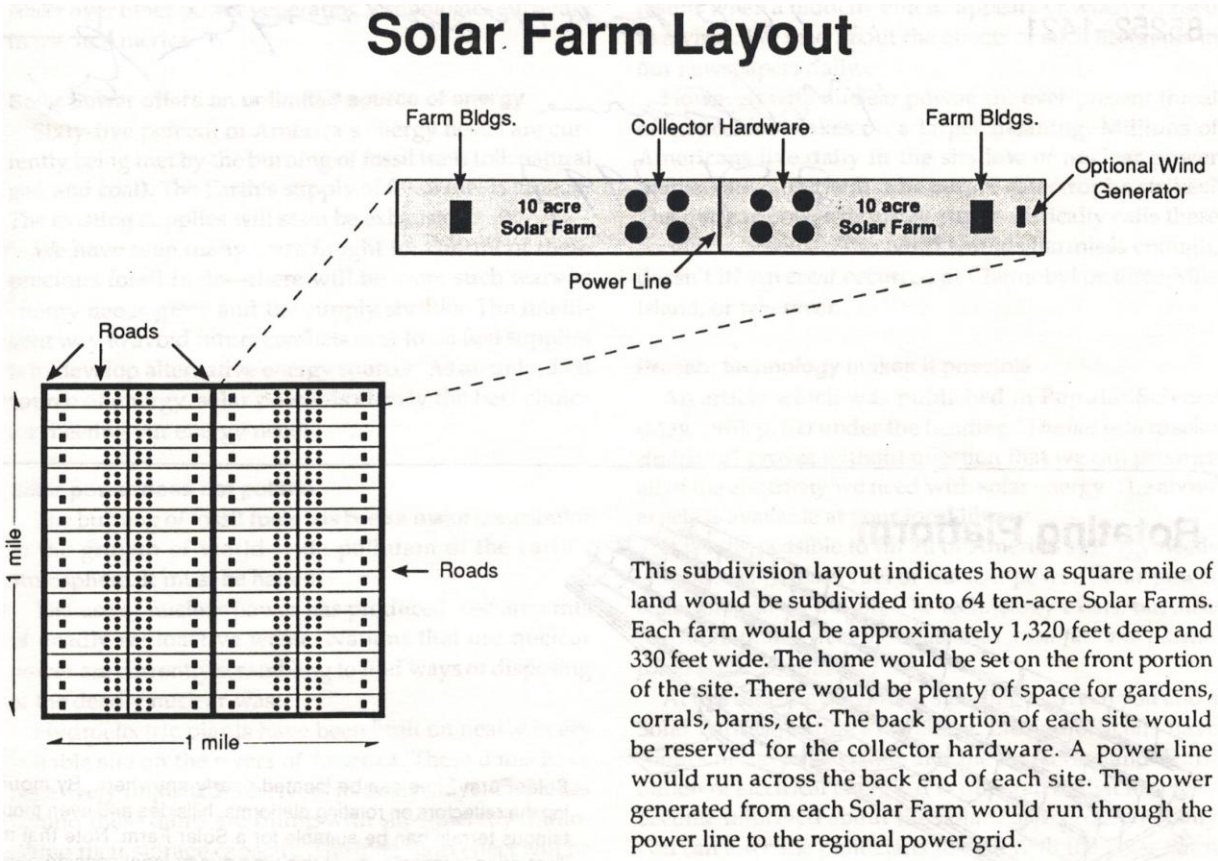

This subdivision layout indicates how a square mile of land would be subdivided into 64 ten-acre Solar Farms. Each farm would be approximately 1,320 feet deep and 330 feet wide. The home would be set on the front portion of the site. There would be plenty of space for gardens, corrals, barns, etc. The back portion of each site would be reserved for the collector hardware. A power line would run across the back end of each site. The power generated from each Solar Farm would run through the power line to the regional power grid.

Stewart's USA Canals Program

Stewart's USA Canals Program

The Solar or (Energy) Farms are a vital part of the canal program, since it would not be practical to use electricity generated by fossil fuel – coal, oil, gas, etc – to produce the vast amount of energy required to lift several million acre feet of water a mile high, and atomic power is out of the question at this time.

With environmental heat energy technology available today, we can produce more electrical energy on a township, a square tract of otherwise arid, worthless, desert waste land six miles on a side, than the power plant at Hoover Dam produces when operating at full capacity (2080 megawatts). Energy Farms in the sun-belt will operate at maximum out put, average ten hours a day plus, and over 300 days per year.

Stewart's plan may be similar to the Army Corps of Engineers' 1950's proposal known as the North American Water and Power Alliance. See http://en.wikipedia.org/wiki/North_American_Water_and_Power_Alliance

The Canadians have proposed their own scheme to pump water from rivers flowing into Hudson Bay south to Lake Huron. See http://en.wikipedia.org/wiki/Great_Recycling_and_Northern_Development_Canal.

The Chinese actually are constructing a grand system of canals, pumps, etc to transfer water from up to three of China's great rivers into China's arid north. See http://en.wikipedia.org/wiki/South%E2%80%93North_Water_Transfer_Project.

NATIONAL WATER PLAN, and CANAL NETWORK

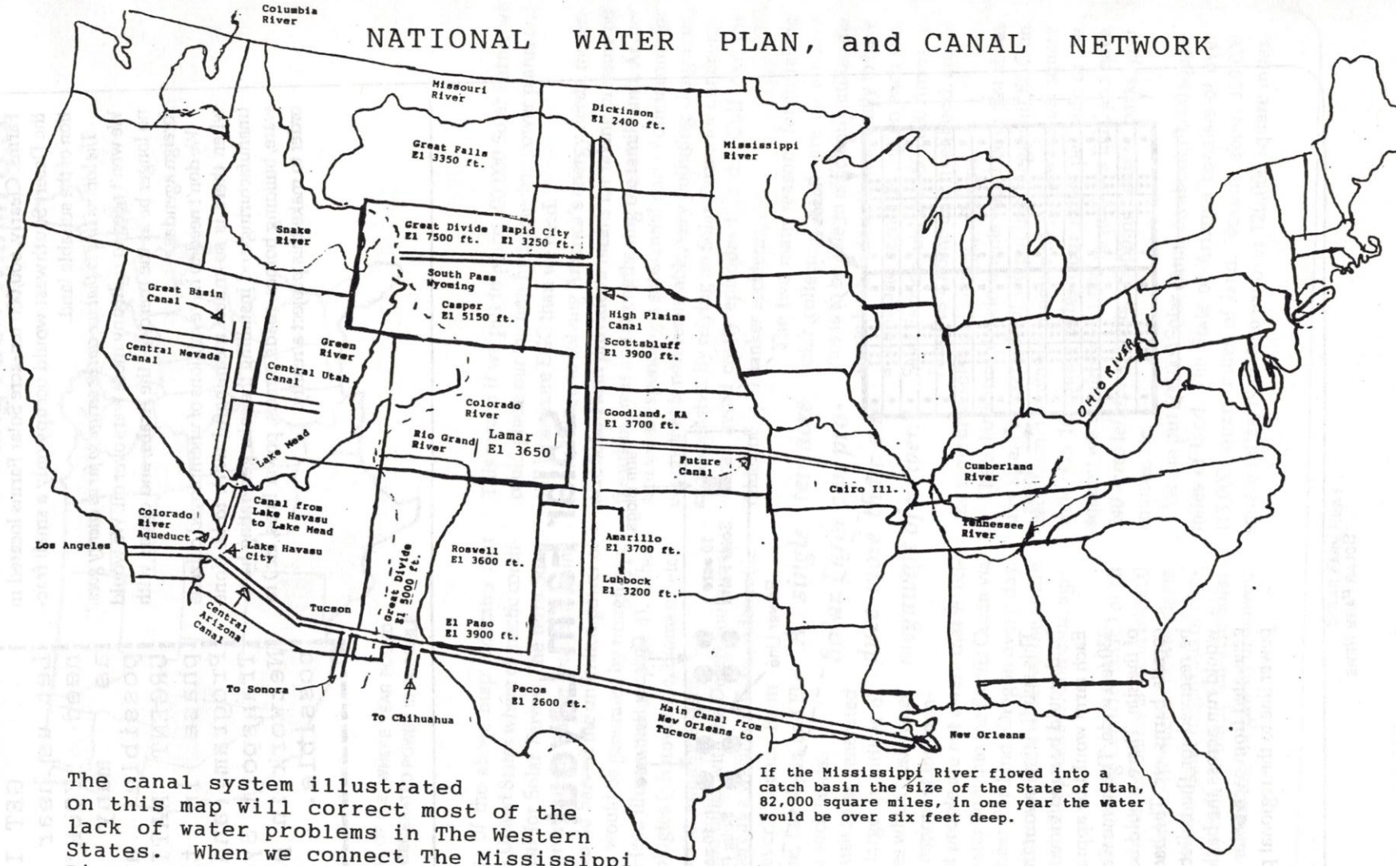

If the Mississippi River flowed into a catch basin the size of the State of Utah, 82,000 square miles, in one year the water would be over six feet deep.

The canal system illustrated on this map will correct most of the lack of water problems in The Western States. When we connect The Mississippi River to The High Plains, and The Colorado River, via a suitable canal network, we will have several hundred million acre feet of water to work with each year, instead of the paltry 15,000,000 acre feet or less that is available from The Colorado River. The energy to lift the water can come from hardware that will use environmental heat, and produce no pollution. If you have further interest, please send long self addressed, stamped (52 cents) envelope

TO: Solar Farms U.S.A.
PO Box 1421
Scottsdale, AZ 85252-1421

OR

Canal
PO BOX 13981
Las Vegas, Nv 89112

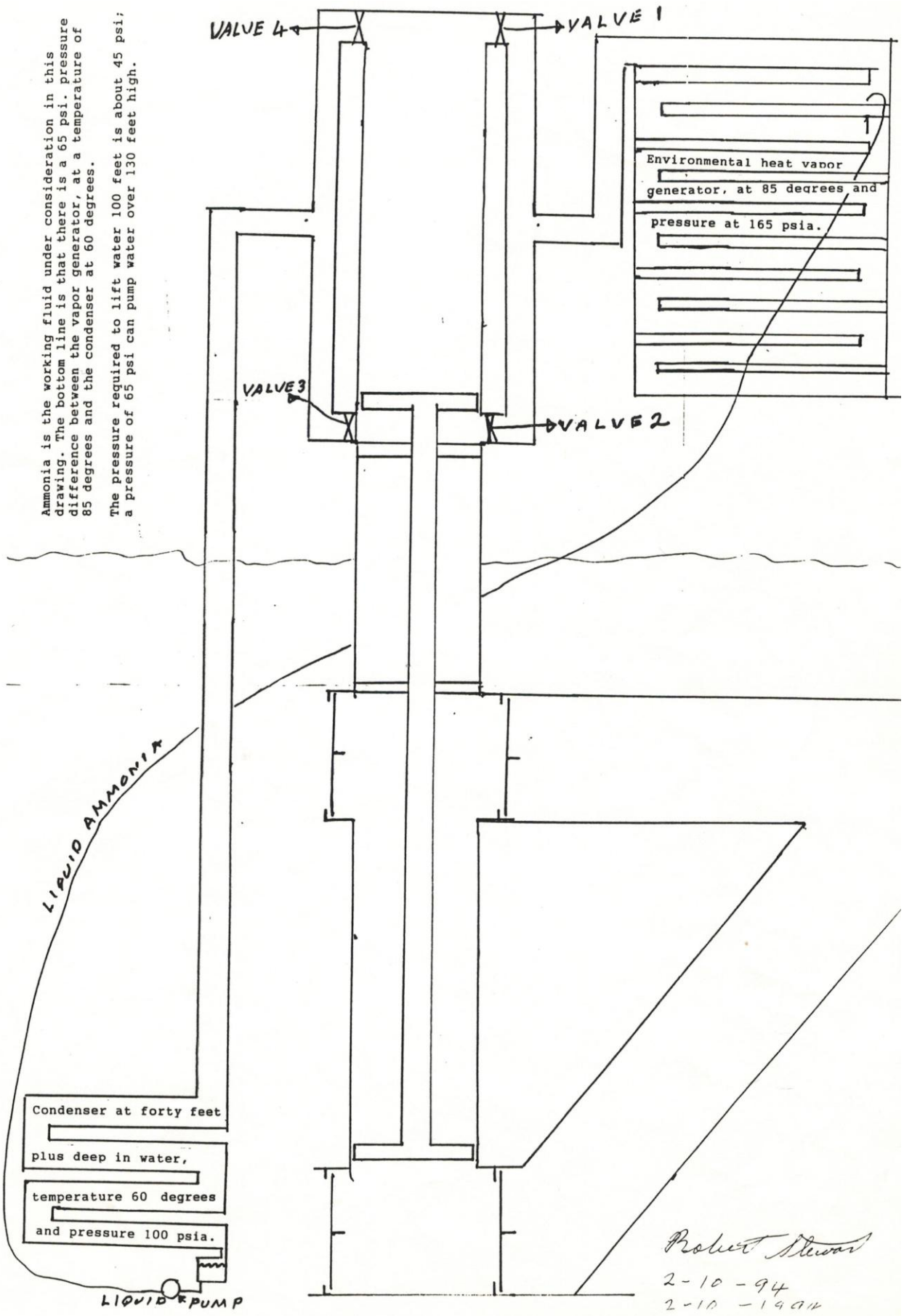
Ammonia is the working fluid under consideration in this drawing. The bottom line is that there is a 65 psi. pressure difference between the vapor generator, at a temperature of 85 degrees and the condenser at 60 degrees.
The pressure required to lift water 100 feet is about 45 psi; a pressure of 65 psi can pump water over 130 feet high.
VALVE 4
VALVE 1
Environmental heat vapor generator, at 85 degrees and pressure at 165 psia.
VALVE 3
VALVE 2
LIQUID AMMONIA
Condenser at forty feet plus deep in water, temperature 60 degrees and pressure 100 psia.
LIQUID PUMP
Robert Stewart
2-10-94
2-10-1994

Vapor Actuated Power Generating Device Patent

United States Patent 4,033,136 July 5, 1977
VAPOR ACTUATED POWER GENERATING DEVICE
Inventor: Robert C. Stewart, Rte. 5. Box 374, Spokane, Wash. 99200
Filed Nov. 20, 1975

References Cited

UNITED STATES PATENTS

573,216	12/1896	Halvorsen	91/417 X
679,016	7/1901	DuchamptaI	91/481
2,088.582	8/1937	Bishop	911481 X
2,115,556	4/1938	Maniscalco	91/188 X
2.746.430	5/1956	Steen	91/235 X
3.521.535	7/1970	Oelrich	91/417 X
3,531.933	10/1970	Baldwin	60,671 X

ABSTRACT

A power generating device that transforms the energy of vapor under pressure from a volatile liquid into useful rotational power that may be used in a stationary location or to propel a vehicle. The vapor under pressure is generated either by heating the volatile liquid in a confined space by means of fuel, or by utilizing solar energy for this purpose.

After the vapor has passed through the power generating device it is cooled and returned to the liquid state. The volatile liquid is, by means of a pump, returned to the confined space where it is again heated to transform to vapor under pressure, with the vapor then being recycled through the power generating device.

7 Claims, 7 Drawing Figures

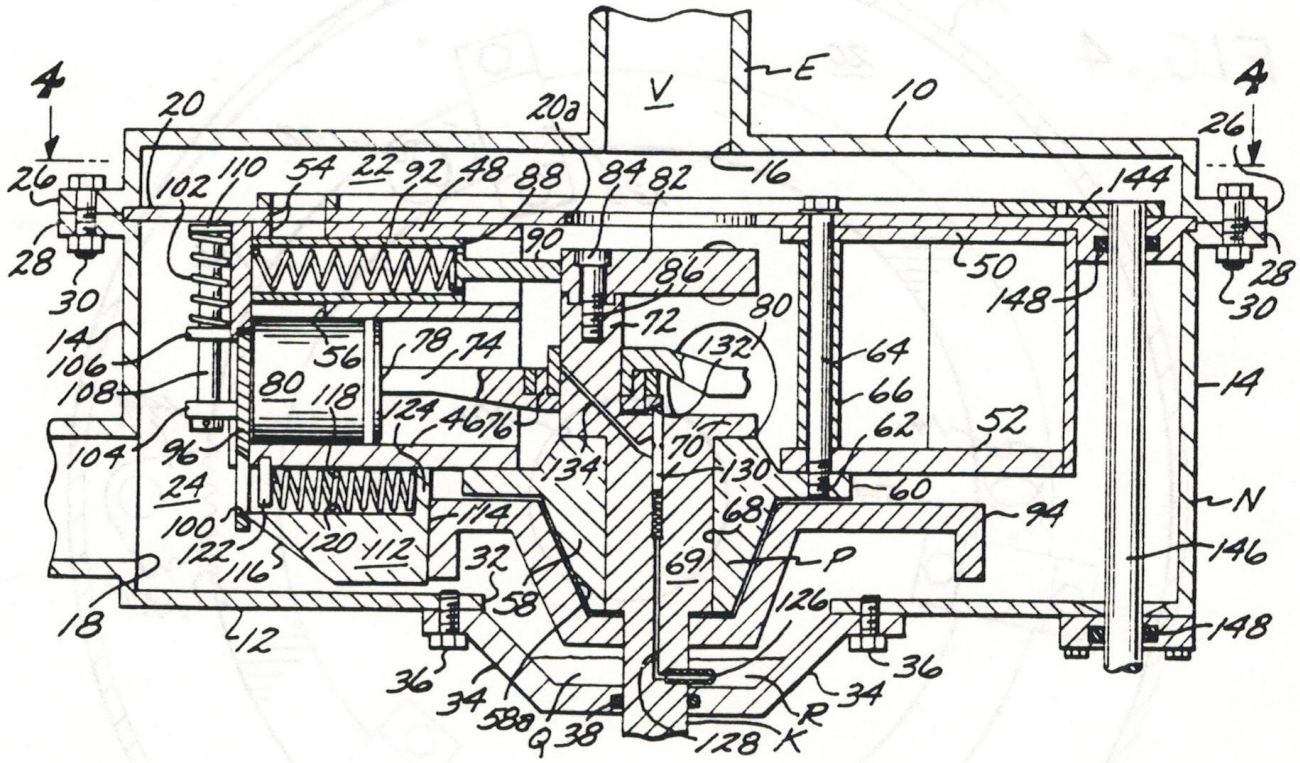

FIG.1

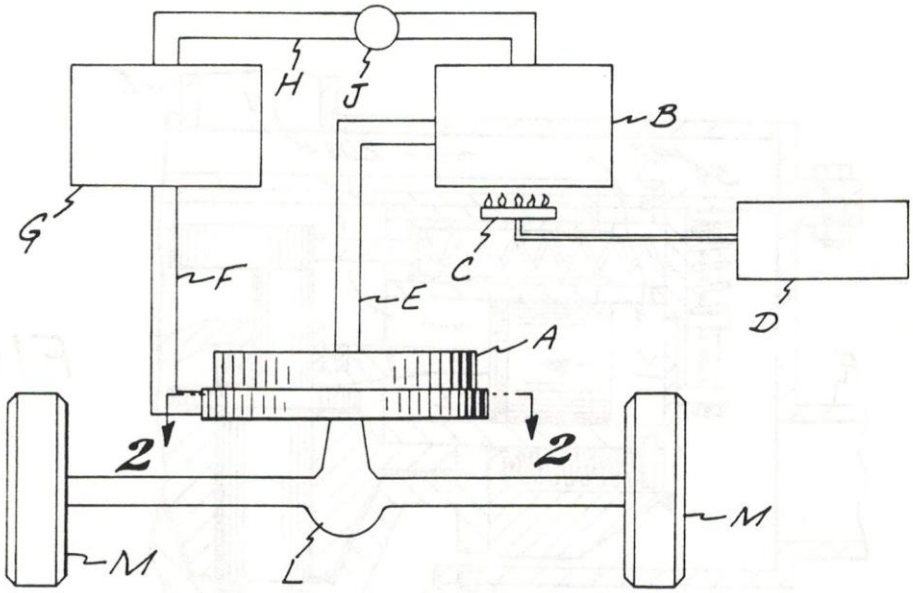
H
J
B
G
C
F
E
D
A
2
2
M
M
L

FIG.2

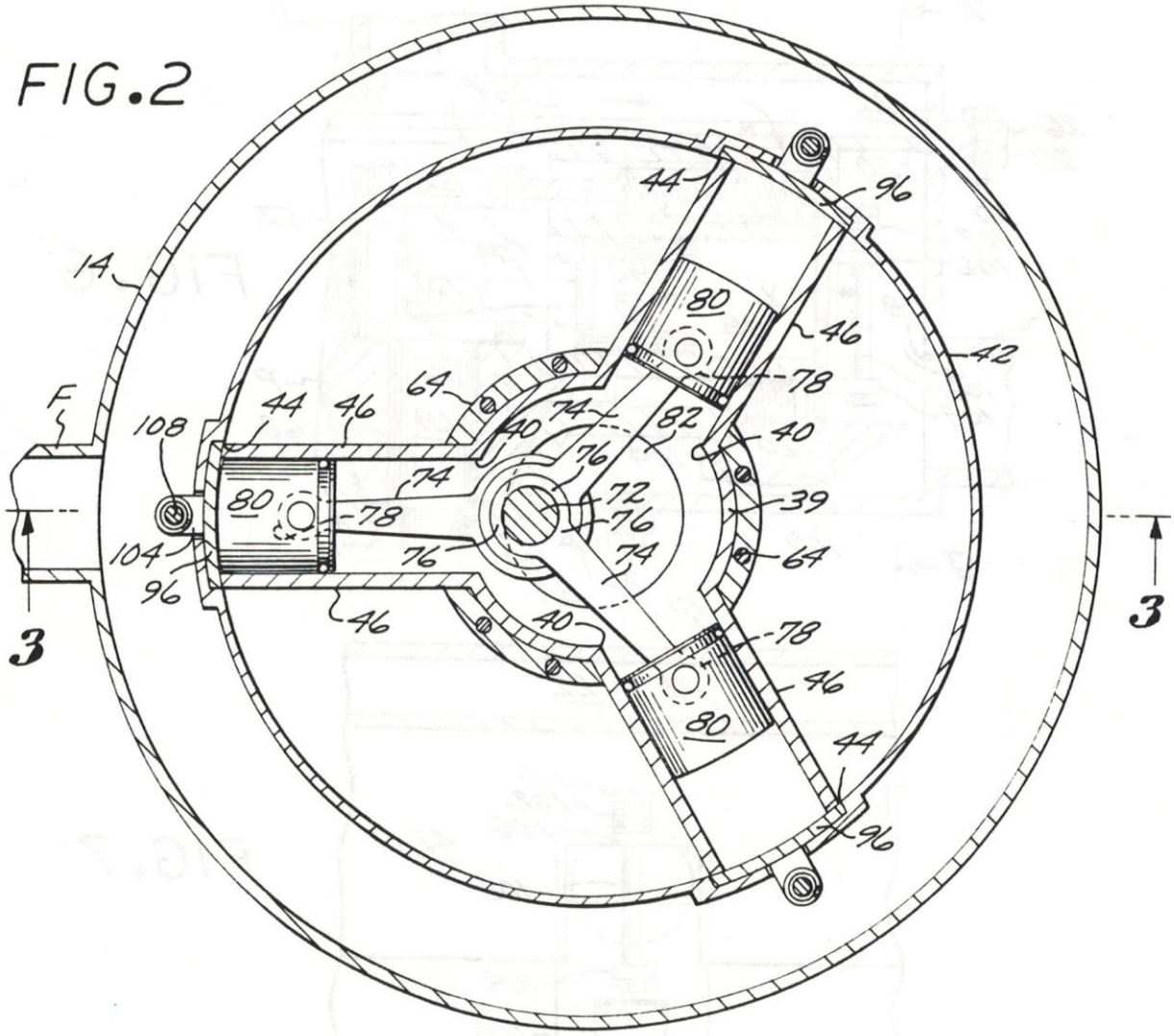
44
96
14
80
46
42
78
64
74
82
40
F
108
44
46
40
76
74
72
39
80
78
76
104
96
76
74
64
46
40
3
3
78
46
80
44
96

FIG. 3

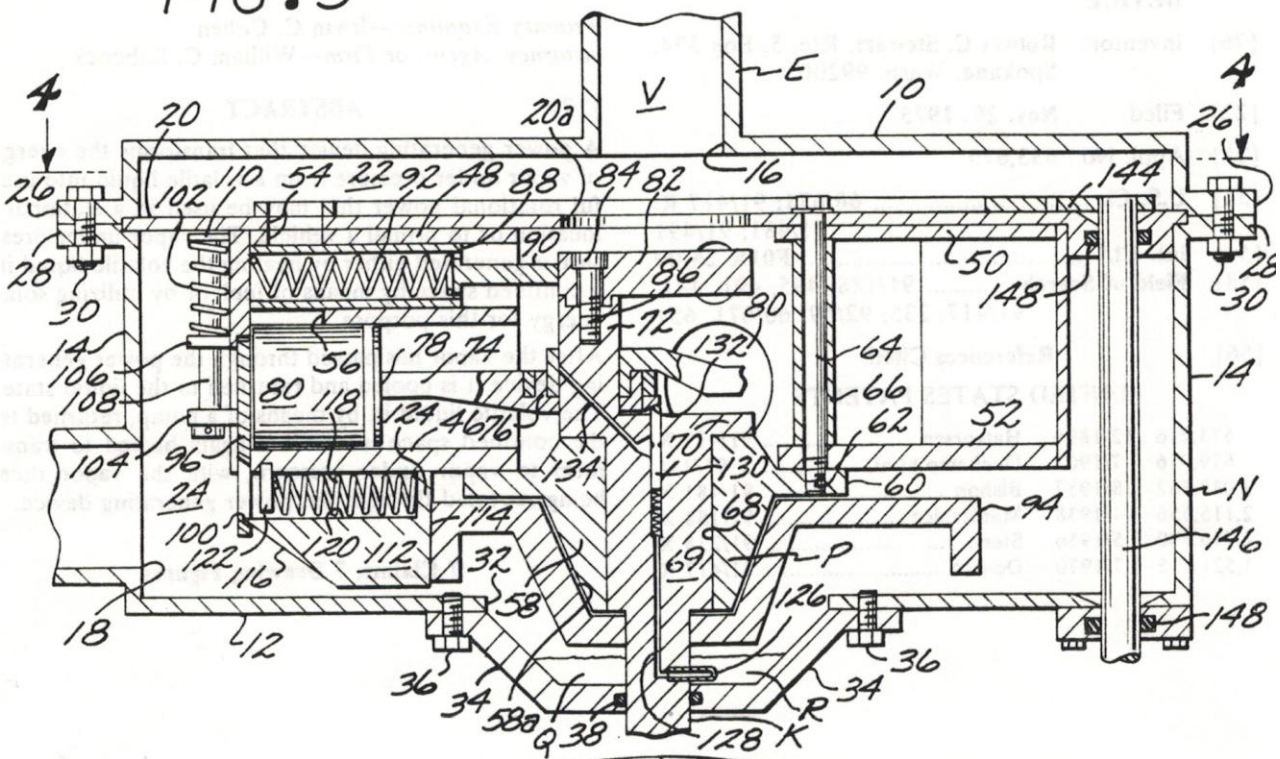
4
4
V
E
10
20
20a
16
26
26
144
102
110
54
22
92
48
88
84
82
28
28
30
30
90
86
50
148
14
106
108
56
78
74
72
80
132
64
66
14
80
118
124
46
76
62
52
104
96
134
70
130
60
24
68
94
N
100
122
120
112
114
69
P
146
116
32
58
126
18
12
148
36
36
34
34
58a
Q
38
128
K
R

FIG. 4

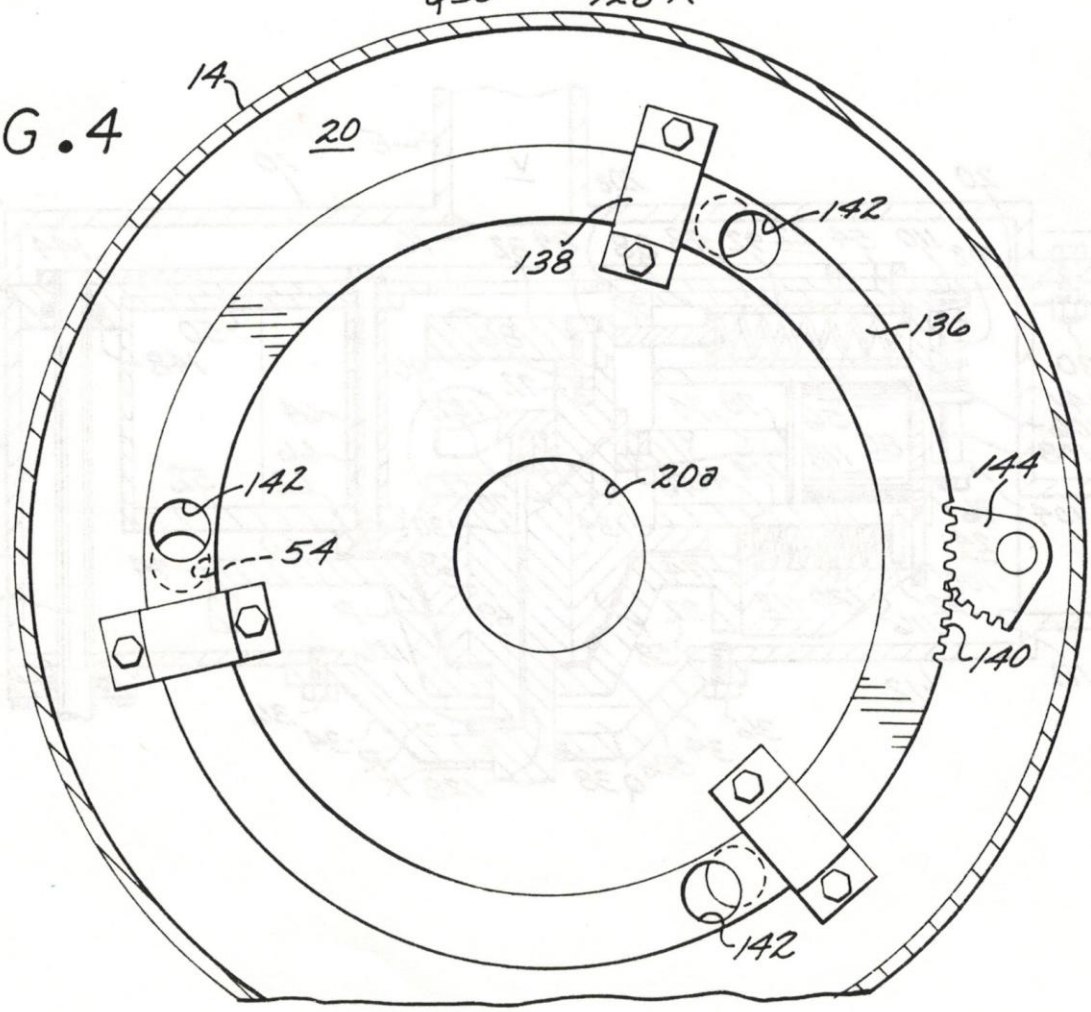
14
20
142
138
136
142
20a
144
54
140
142

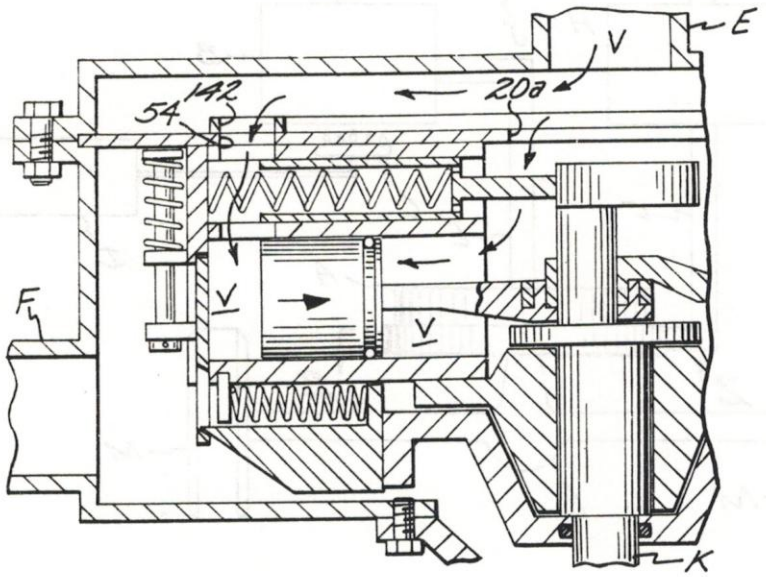

FIG. 5

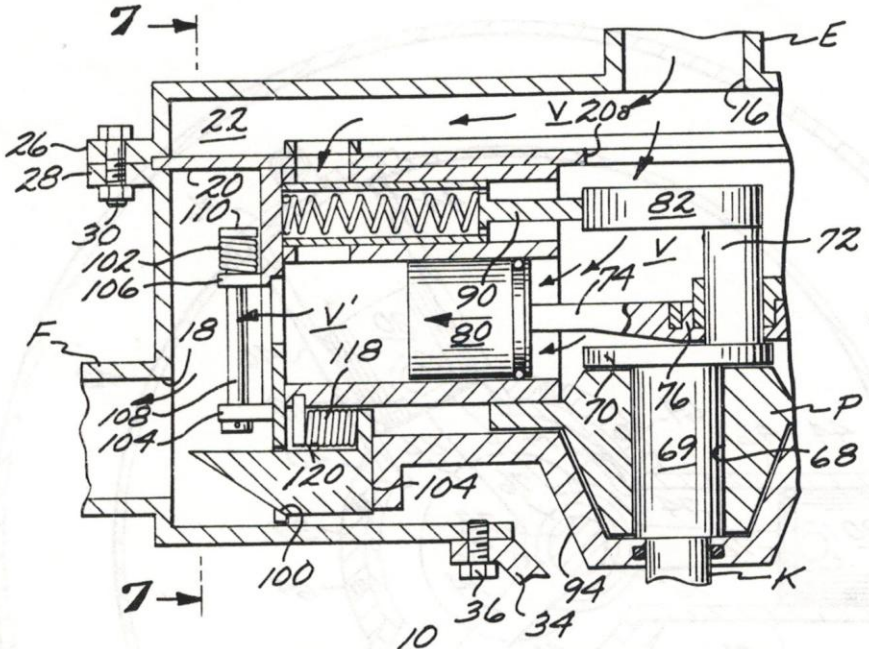

FIG. 6

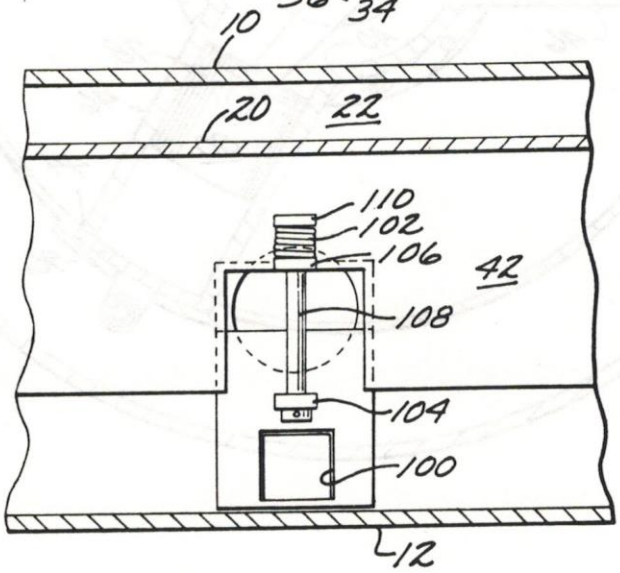

FIG. 7

VAPOR ACTUATED POWER GENERATING DEVICE

BACKGROUND OF THE INVENTION

1. Field of the Invention

Vapor actuated power generating device.

2. Description of the Prior Art

In the past, the desirability of sequentially vaporizing a volatile liquid and thereafter condensing the vapor to die liquid state after it has performed useful work, has been realized, but no simple, efficient, power generating device has been available to transform the energy of the vapor ino useful rotational power.

A major object of the present invention is to provide a vapor actuated power generating device that has a simple mechanical structure, and one that efficiently transforms the energy of pressurized vapor from a low boiling point liquid into rotational energy as the liquid forming the vapor is alternatively heated and condensed to be recycled through the invention.

SUMMARY OF THE INVENTION

The present rotational power generating device receives pressurized vapor from heating a low boiling point liquid, such as Freon or the like, in a confined space. Energy in the pressurized vapor is extracted therefrom as rotational power as the vapor flows through the present invention. After discharging from the rotational power generating device, the vapor is subjected to cooling to return the vapor into the liquid state. The condensed liquid is then by means of a power-driven pump, returned to the confined space to again be heated and pass through the above described power generating cycle.

In detail, the power generating device includes a housing assembly that has first and second end walls that are connected by a continuous side wall. The first end wall has a first conduit extending therefrom to receive pressurized vapor. The side wall has a second conduit extending therefrom through which vapor is discharged after flowing through the device, when the conduit delivering the vapor to a location where it is subjected to cooling to return to the liquid state. The housing assembly includes a transverse partition in the interior thereof that subdivides the interior into first and second compartments which are in communication with the first and second conduits.

The invention includes a cylinder-defining assembly disposed within the housing, and this assembly also includes a first inner cylindrical shell having a number of circumferentially spaced first openings formed therein. The first shell is surrounded by a second cylindrical shell having a number of circumferentially spaced second openings formed therein that are in radial alignment with the first openings. The first and second shells have first and second circumferential edges. A number of first tubular cylinders extend radially between the first and second openings in the first and second shells. A number of second tubular cylinders are supplied that extend inwardly from the second shell and are parallel and disposed adjacent to the first cylinders. First and second circular plates extend between the first and second circumferential edges of the first and second shells.

The first plate is adjacent to the partition secured thereto. A number of circumferentially spaced sets of first ports are provided that extend through the partition and second cylinders to establish communication between the first compartment and the interior of the second cylinders. A number of circumferentially spaced second ports are provided that establish communication between the interior of the second and first cylinders, and are axially aligned with the first sets of ports.

A first bearing is disposed in the housing, and is in coaxial alignment with the first shell, with the first bearing being supported from the cvlinder-defining assembly. The power output shaft is journaled in the first bearing and extends outwardly through an opening formed in the second end wall. The power output shaft has a head secured to an end thereof that is disposed within the first shell.

A pin is eccentrically mounted on a shaft-supported head, with the pin extending towards the partition. A number of connecting rods having first and second end portions are provided, with the first end portions being pivotally connected to the above identified pin. A number of first pistons are slidably mounted in the first cylinders, with the second end portions of the piston rods being pivotally conected to the first pistons.

A first cam is supported from the free end of the pin, and occupies a fixed position relative to the head. A number of second pistons are slidably mounted in the second cylinder. A number of first springs are furnished that at all times tend to maintain the second pistons in contact with the first cam. A second cam is secured to the shaft and disposed within the housing.

Circumferentially spaced first members are slidably supported on the second shell, and when in first positions close the second openings in the second shell, with the first members including projecting projecting portions in which openings are defined. A number of second springs are provided that at all times tend to maintain the first members in first positions in which the outer ends of the first cylinders are closed. Second members are circumferentially spaced and slidably supported for radial movement from the second plate, with each of the second members including a first end that is in slidable abutting contact with the second cam, and a second angularly disposed end that engages one of the openings in one of the projecting portions of one of the members. A number of third springs are provided that serve to maintain the second members in contact with the second cam.

The power output shaft is driven by the vapor under pressure as it flows from the first compartment through an opening in the partition to the interior of the first cylindrical shell and inwardly disposed end portions of the first cylinders. The first cam cooperates with each of the second pistons and the first springs to sequentially open the first sets of ports and second port associated therewith and allow vapor from the first compartment to flow into one of the first cylinders until the first piston therein has traversed to substantially the innermost position. During this travel the pressure on both ends of cach first piston is the same. When the first piston is in this innermost position, the first cam has rotated to a position where the second piston associated with that particular first piston is moved to a position to obstruct communication between the first compartment and that particular first cylinder.

The second cam is rotating and is so related to the motion of the first cam that it moves one of the first members outwardly to permit the first member to move the second member associated with that particular cylinder towards the second end wall to allow vapor in the outer end of that particular first cylinder to escape therefrom into the second compartment and second conduit. Each of the first pistons in the invention are sequentially subjected to the above described operation, whereby the power output shaft is rotated to generate useful rotational power from the energy extracted from the pressurized vapor as it flows through the invention.

BRIEF DESCRIPTION OF THE DRAWINGS

FIG. 1 is a diagrammatic view of the invention and illustrating the manner in which it is associated with a source of pressurized vapor from a volatile liquid, together with a device for cooling the vapor after the latter has passed through the invention to return the latter to the liquid state, and a pump for transferring the condensed liquid to a confined space to again be heated to be transformed to vapor that is recycled through the invention;

FIG. 2 is a transverse cross-sectional view of the power generating device;

FIG. 3 is a cross-sectional view of the power generating device, taken on the line 3-3 of FIG. 2;

FIG. 4 is a transverse cross-sectional view of the power generating device, taken on the line 4-4 of FIG. 3;

FIG. 5 is a fragmentary cross-sectional view of the power generating device in a position where pressurized vapor flows from the first compartment into the outer portion of one of the first cylinders to equalize the vapor pressure on both the left and right hand end portions of the piston;

FIG. 6 is the same view as shown in FIG. 5, but with one of the first members so disposed that pressurized vapor flows from the first cylinder to the second compartment and the second conduit, with the pressurized vapor on the right hand end portion of the piston then tending to drive the piston to the left, as viewed in this figure, and cause the power output shaft to rotate; and

FIG. 7 is a fragmentary cross-sectional view of the device, taken on the line 7-7 of FIG. 6.

DESCRIPTION OF THE PREFERRED EMBODIMENT

The vapor actuated power generating device A of the present invention, as may be seen in FIG. 1, is adapted to be used as a prime mover on a vehicle, as well as a prime mover when it occupies a stationary position. The power generating device A is used in conjunction with a first device B that heats a low boiling point liquid such as Freon to a pressurized vapor state. The first device B may be either a boiler as illustrated in the drawing that is heated by a burner C to which fuel is supplied from a source D, or a series of closed tubes (not shown) that are exposed to the sunlight to absorb heat and transform the low boilng point liquid to the pressurized vapor state. Irrespective of the source of heat for the device B, the latter has a first conduit E extending therefrom through which pressurized vapor flows to the power generating device A.

A second conduit F is provided through which the vapor is discharged after flowing through the power generating device A to return to a vapor condensing the device G, which device returns the vapor to the liquid state. After being condensed, the liquid fiows through a third conduit H to a pump J that is powerdriven, which pump through a fourth conduit H-1, delivers the liquid to the first device B to be recycled through the power generating device A.

The vapor actuated power generating device A, as may be seen in FIG. 3, includes a power output shaft K. The output shaft K in the diagram as shown in FIG. 1, extends to a transmission L, which by conventional mechanical means transfers the rotational power of the shaft to two laterally spaced wheels M.

The structure of the vapor actuated power generating device A, as best seen in detail in FIG. 3, the power generating device A includes a housing assembly N. Assembly N includes a first end wall 10, second end wall 12, and a continuous side wall 14 that extends therebetween. The first conduit E is in communication with an opening 16 formed in the first end wall 10. The second conduit F is in communication with an opening 18 formed in the side wall 14.

The housing assembly N has an internal transverse partition 20, with the partition subdividing the interior of the housing N into a first compartment 22 and second compartment 24. The housing N, as illustrated in FIG. 3, is of two-part structure, with the first end wall 10 and portion of side wall 14 developing into a first flange 26, which is in abutting sealing contact with a second flange 28 that forms a part of the second portion of the housing that includes the second end wall 12 and a part of the side wall 14. Bolts 30 are

furnished that extend through aligned openings in the first and second flanges to removably secure the two portions of the housing together in the configuration shown in FIG. 3.

The second end wall 12 has a centered opening 32 therein that is removably cbosed by a wall section 34 that is secured to the end wall by a number of spaced bolts 36. The wall section 34 has a sealed bearing 38 mounted therein in which the power output shaft K is rotatably disposed.

The cylinder-defining assembly O, as best seen in FIG. 2, includes a first cylindrical shell 39 that has a number of circumferentially spaced first openings 40 defined therein. The first cylindrical shell 39 is concentrically disposed relative to a second cylindrical shell 42 that has a number of circumferentially spaced second openings 44 formed therein that are radially aligned with the first openings 40. A number of first tubular cylinders 46 are provided, with the first cylinders extending between the first openings 40 and the second openings 44 as shown in FIG. 2. In FIG. 3 it will be seen that each of the first cylinders 46 has a second cylinder 48 adjacently disposed thereto in parallel relationship, with the second cylinders being secured to a first circular plate 50. The cylinder-defining assembly O includes a second plate 52 as may be seen in FIG. 3. A number of circumferentially spaced sets of first ports 54 formed in the partition 20 and first plates 50 that are in communication with the first compartment 20. Each of the first cylinders 46 has a second port 56 therein that is axially aligned with one of the sets of first port 54 as best seen in FIG. 3.

The power generating device A, as may be seen in FIG. 3, includes a bearing P that is defined by a body 58 that has a circumferential flange 60 extending outwardly therefrom with the flange having a number of circumferentially spaced tapped bores 62 formed therein. A number of holts 64 extend downwardly from the partition 20, which bolts are surrounded by tubular spacers 66, and the bolts engaging the tapped bores 62 to support the bearing P in a fixed position within the power generating device A as shown in FIG. 3. The bearing P has a downwardly and inwardly tapered external surface 58a. The bearing P has a bore 68 extending therethrough.

The power output shaft K as shown in FIG. 3 includes a portion 69 of enlarged transverse cross-section that is rotatably supported in the bore 68. Shaft portion 69 has a head 70 extending outwardly from the upper portion thereof, which head supports an upwardly extending pin 72 that is rotatably engaged by a number of interlocking connecting rods 74 that have first end portions 76 and second end portions 78. The second end portions 78 are, by conventional means (not shown), pivotally connected to the first pistons 82. The upper end of the pin 72, as viewed in FIG. 3, supports a first cam 82 that is secured thereto by a bolt 84 that extends downwardly through the cam to engage a tapped bore 86 formed in the pin. Second pistons 88 are mounted in the first cylinders 48 and have piston rods 90 extending inwardly therefrom. First compressed springs 82 of helical configuration are disposed in the second cylinders 48 and at all times urge the piston rods 90 into sliding pressure contact with the first cam 82.

In FIG. 3 it will be seen that the shaft K supports a second cam 94 that project outwardly therefrom.

A number of first plate-like members 96 are disposed in circumferential spacing on the second cylindrical shell 42 and when disposed in first positions, as shown in FIG. 3, have portions 98 that project downwardly therefrom in which openings 100 are formed. The first 3 members 96 have first lugs 104 projecting outwardly therefrom that are axially aligned with second lugs 106 secured to the second cylindrical shell 42. Bolts 108 extend upwardly through openings in the first and second lugs 104 and 106, with the upper portions of the bolts having second helical springs extending therearound, and the springs being in abutting contact with nuts 110 or other abuttment means secured to the upper ends of the bolts.

A number of circumferentially spaced radially extending second mcmbers are slidably supported from the second plate 52 by conventional means (not shown) and the second members including first ends 114 and second ends 116 that taper upwardly at an angle. The second ends 116 are at all times in engagement with the openings 100. Third springs 118 of helical configuration are disposed in longitudinally extending recesses 120 formed in the upper portions of the second members 112, as viewed in FIG. 3, and the springs 118 having outwardly disposed ends thereof in abutting contact with lugs that extend downwardly from the second plate 52. The opposite ends of the third springs 118 are in contact with an abutment 124 that forms a part of the second members 112.

The upper surface of the sections 34 provides a sump Q for a quantity of oil R which oil is withdrawn from the sump Q through a strainer 126 into a passage 128 in shaft K by a spring-loaded reciprocating pump 130 that is actuated due to being in slidable contact with a cam 132 formed on one of the first piston rod portions 76. Oil is discharged from the pump 130 through a passage 134 to lubricate the first piston rod portions 76.

In FIG. 4 it will be seen that a flat ring 136 is slidably and rotatably supported on the upper surface of the partition 20 as viewed in FIG. 3. The ring 136 is maintained in a fixed position on partition 20 by a number of U-shaped guides 138. The ring 136 has a toothed portion 140 formed thereon. A number of third ports 142 are formed in circumferentially spaced positions on the ring 136, and the third ports, as the ring is rotated, capable of being moved into communication with the first ports 54. The toothed portion 140 is engaged by a rotatable tooth membr 144 that is secured to the upper end of a rod 146 that, by bearings 148, is rotatably supported in the housing assembly N. The rod 146 projects downwardly below the housing assembly N as viewed in FIG. 3, and by a handle (not shown) may be rotated. Rotation of the rod 146 results in concurrent rotation of the ring 136 to align a desired portion of the third ports 42 with the first ports 54.

The use and operation of the invention is extremely simple. The pressuriied vapor is at all times supplied to the first compartment 22. As the power generating device A operates, and the shaft K rotates, each of the first pistons 80, when in the outermost portion of its stroke as shown in FIG. 5, has pressurized vapor on opposite ends thereof. The flow of the vapor to the first pistons 80 is shown in FIG. 5 by arrows. Thus, as each piston 80 moves inwardly from the position as shown in FIG. 5 to that illustrated in FIG. 6, a minimum of work is involved in so moving the piston 80.

When each piston 80 has moved inwardly to the position shown in FIG. 6, the first cam 82 has rotated to a position where the second pistons 88 associated therewith obstruct further flow of vapor into the outer end portion of the cylinder. Concurrently, the first member 96 associated with that particular first cylinder 46, has been moved downwardly by movement of the second member 112 to permit vapor V' to escape from the cylinder into the second compartment 24 to flow therefrom through the conduit F. The vapor V on the right hand end portion of the first cylinder 80, shown in FIG. 6, now forces the first piston to the left and the connecting rod 74 associated therewith imports rotational movement to the power output shaft K through the pin 72. The above-described operation is performed on each of the first pistons 80 as the shaft K rotates.

The speed of rotation of the shaft K may be controlled by varying the position of the third ports 142 relative to the first ports 54 by rotation of rod 146. By restricting the flow of vapor V into the left hand end portions of a first cylinder 46 when a first piston 80 is in the position shown in FIG. 5, the piston 80 no longer has equal vapor pressure on both ends thereof, and work is then required to move the flrst piston 80 to the position shown in FIG. 6. Subjecting the first pistons 80 to this increased work load slows down the rate of rotation of power output shaft K.

The power generating device A may be operated on any low boilng liquid such as one of the commercially available Freons used in refrigeration. If desired, an easily liquifiable gas such as carbon dioxide or sulfur dioxide may be employed.

The vapor condensing device D will be of a type suited for the particular liquid that results in the vapor V, and may be of the absorbent or absorbate type. As the vapor V' discharges from the power generating device A, the vapor expands and in so doing is cooled. Under proper conditions, this cooling combined by the cooling effected by the device D from material causes, such as being located underground, will be sufficient to transform the vapor V' back to the liquid state.

The use and operation of the invention has been described previously in detail and need not be repeated.

1 claim:

1. In combination with a first device for generating heat that transforms a low boiling point liquid into vapor under pressure that is discharged therefrom; a second device that receives said vapor and cools the same to return to the liquid state; a third device which receives said liquid from said second device and returns said liquid to said first device, a power generating device that receives pressurized vapor from said first device and discharges said vapor at reduced pressure to said second device, said power generating device including:

a. a housing assembly that includes a partition that divides the interior of said housing assembly into a first and a second compartment, said first compartment at all times in communication with said first device to receive said vapor under pressure therefrom, and said second compartment in communication with said second device;
b. a cylinder defining assembly disposed in a fixed position in said housing assembly, said cylinder defming assembly including a plurality of circumferentially spaced, radially extending first cylinders, said first cylinders having first open inwardly disposed ends in communication with said first compartment and second outwardly disposed open ends in communication with said second compartment;
c. a power output shaft rotatably supported in said housing assembly and extending outwardly therefrom;
d. a plurality of first pistons slidably and sealingly mounted in said first cylinders, said pistons having first and second ends, said first ends in communication with said first compartment and at all times exposed to said vapor under pressure;
e. a plurality of piston rods having first and second ends, said second ends pivotally connected to said first pistons;
f. eccentric means that rotate concurrently with said power output shaft, with said eccentric means pivotally engaged by said first ends of said piston rods;
g. a plurality of passage means that provide communication between said first compartment and each of said cylinders adjacent said second end of the latter;
h. a plurality of first independently movable means for closing said second ends of said cylinders;
i. a plurality of second independently movable means for closing said passage means;
j. first means actuated by the rotation of said power output shaft for sequentially moving each of said first movable means to an open position when said piston associated therewith has moved to the innermost position and so maintaining said first means as vapor under pressure in said first compartment forces said piston outwardly to the outermost position thereof, with said first means sequentially closing each of said second ends of said cylinders after said piston associated therewith has moved to said outermost position, and each of said pistons as it moves from said innermost to said outermost position by vapor under pressure in said first compartment causing said power output shaft to rotate due to the differential in vapor pressure on said first and second ends of said pistons; and

k. second means actuated by the rotation of said power output shaft to sequentially maintain each of said second movable means in an open position as said piston associated therewith moves from an outermost to an innerrnost position to permit said vapor in communication with said first and second ends of said piston to be at substantially equal pressure to minimize the energy required to move said piston from said outermost to said innerrnost position and said second means sequentially closing each of said passage means as said piston associated therewith starts to move from said outermost to said innermost position.

2. A power generating device as defined in claim 1 in which said cylinder defining assembly includes first and second end walls that have first and second concentric shells extending therebetween, said first and second shells having a plurality of first and second circumferentially spaced openings therein, and said plurality of cylinders disposed between said first and second end walls and extending radially between said first and second openings therein, said first end wall having an opening therein that at all times maintains comrnunication between said first compartment and said first openings in said first shell, and said plurality of first independently movable means being a plurality of first springs and first spring loaded members slidably supported on said second shell that at all times tends to remain in positions where they close said second openings.

3. A power generating device as defmed in claim 2 in which said members have third openings therein out of alignment with said second openings, and said second means includes a plurality of second springs and second spring loaded members slidably supported from said second sidewall, said second spring loaded members each including a first inner end and a second outer tapered end that is in engagement with one of said third openings; and a cam on said power output shaft that has first ends of said second spring loaded members in slidable pressure contact therewith, and said cam as it rotates with said power output shaft sequentially moving each of said second members outwardly for said second end thereof to move outwardly through said third opening associated therewith to move said mcmber in which said opening is defined to said open position.

4. A power generating device as defined in claim 1 in which said eccentric means includes:

l. a head secured to said shaft adjacent said first ends of said first cylinders; and
m. an off-centered pin that extends from said head and is pivotally engaged by said second ends of said piston rods.

5. A power generating device as defined in claim 4 in which said plurality of second independently movable means includes:

n. a plurality of second cylinders parallel to said first cylinder, each of said second cylinders adjacent said second end thereof having a flrst port therein that is in communication with said first compartment and the interior of said second cylinder and a second port in communication with the interior of said second cylinder and a second port in communication with the interior of said second cylinder and said first cylinder associated therewith;
o. a cam mounted on said shaft; and
p. a plurality of spring loaded second pistons slidably and sealingly supported in said second cylinders, said second pistons in sliding pressure contact with said cam mounted on said shaft, and said cam mounted on said power output shaft as said cam rotates sequentially moving said second pistons to concurrently establish communication between said first and second ports and break communication between said first and second ports associated therewith.

6. A power generating device as defined in claim 5 which in addition includes:

q. third manually operable means for controlling the speed of rotation of said power output shaft by controlling the rate at which said vapor can flow from said first compartment through said first and second ports into said first cylinders as said first pistons move from outermost to innermost positions.

7. In combination with a first device for generating heat that transforms a low boiling point liquid into vapor under pressure that is discharged therefrom; a second device that receives said vapor and cools the same to return to the liquid state; a third device which receives said liquid from said second device and returns said liquid to said first device, a power generating device that receives pressurized vapor from said first device and discharges said vapor at reduced pressure to said second device, said power generating device including:

a. a housing assembly that includes first and second spaced end walls connected by a continuous side wall, said first end wall having a first conduit extending therefrom to receive said vapor from said first device, said side wall having a second conduit extending therefrom to said second device to deliver said vapor to the latter, and a transverse partition in said housing that subdivides the interior into first and second compartments that are in communication with said first and second conduits;
b. a cylinder defining assembly secured to said partition and disposed in said housing, said cylinder defining assembly including a first inner cylindrical shell having a plurality of circumferentially spaced first openings formed therein, a second outer cylindrical shell having a plurality of circumferentially spaced second openings therein that are radially aligned with said first openings, said first and second shells having first and second circumferential edges, a plurality of first tubular cylinders that extend radially between said first and second openings in said first and second shells, a plurality of second tubular cylinders that extend inwardly from said second shell and are parallel thereto, and first and second circular plates that extend between said first circumferential edges of said first and second shells and said second circumferential edges thereof, said first plate adjacently disposed to said partition and secured thereto, a plurality of circumferentially spaced sets of first ports that extend through said partition and second cylinders to establish communication between said first compartment and the interior of said second cylinders, and a plurality of circumferentially spaced second ports that establish communication between the interiors of said second and first cylinders and are axially aligned with said first ports;
c. first bearing means in said housing coaxially aligned with said first shell, said first bearing means being supported from said cylinder defining assembly;
d. a power output shaft journaled in said bearing means and extending outwardly through an opening in said second end wall;
e. a head secured to said shaft and disposed within said first shell;
f. a pin eccentrically mounted on said head, said pin extending towards said partition;
g. a plurality of connecting rods having first and second end portions, said first end portions pivotally connected to said pin;
h. a plurality of first pistons slidably mounted in said first cylinders, said second end portions of said piston rods pivotally connected to said first pistons;
i. a first cam supported in a fixed position relative to said head;
j. a plurality of second pistons slidably mounted in said second cylinders;
k. a plurality of first springs that at all times maintain said second pistons in contact with said first cam;
l. a second cam secured to said shaft and disposed within said housing;
m. a plurality of circumferentially spaced first mcmbers slidably supported on said second shell and when in first positions closing said second openings in said second shell, said first members including projecting portions in which openings are defined;
n. a plurality of second springs that at all times tend to maintain said first members in said first positions;

o. a plurality of second members that are circumferentially spaced and slidably supported for radial movement from said second plate, each of said second member including a first end that is in slidable abutting contact with said second cam, and a second angularly disposed end that engages one of said openings in one of said projecting portions; and

p. a plurality of third springs that maintain said second members in contact with said second cam, with said power output shaft being driven by said vapor under pressure flowing from said flrst compartment through an opening in said partition to the interior of said first shell and inwardly disposed end portions of said first cylinders, said first cam cooperating with each of said second pistons and first springs to sequentially open one of said first sets of ports and second port associated therewith to allow said vapor from said first compartment to flow into one of said first cylinders until said first piston therein has traversed to substantially its innerinost position whereupon said first cam has rotated to a position where said second piston operatively associated with that particular first cylinder is moved to a position to obstruct communication between said first compartment and said particular first cylinder, with said second cam as it rotates then moving one of said first members outwardly for said first mcmber to move said second niember associated with that particular first cylinder towards said second end wall to align said opening in said second mcmber with said particular first cylinder to allow said vapor in said particular first cylinder to escape therefrom to said second compartrnent and second conduit, and the differential in vapor pressure between first and second end portions of said piston in that particular cylinder forcing said piston outwardly to rotate said power output shaft.